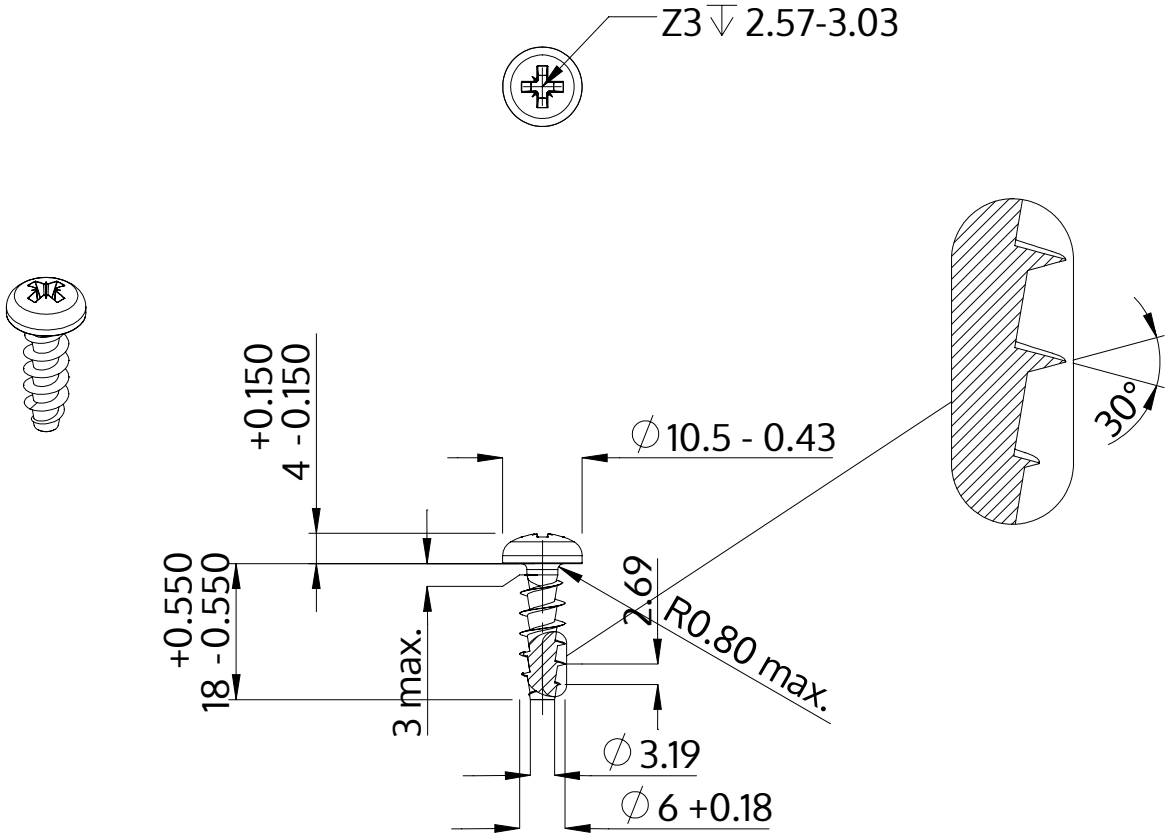

Description	STP22A 6.0x18.0 - Z3
Material	stainless-steel A2
Surface	bright, pickled and passivated
Weight	3.623 kg / 1000 pieces

SCREWERK	**STP22A0600180E**	
Metric Drawing A4	Scale 1:1	2024-10