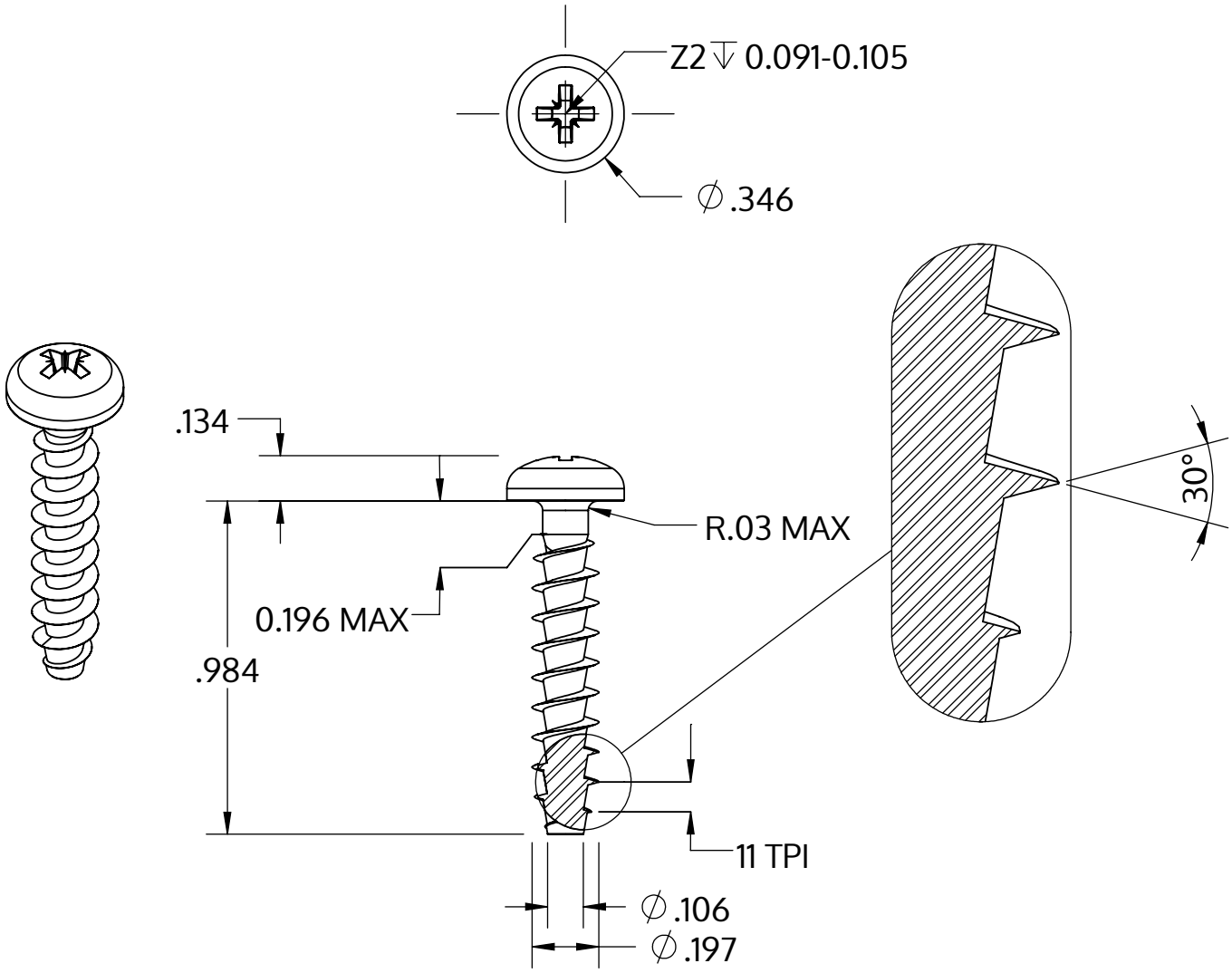


| | |
|---|---|
| Metric size | M5 x 2.24 mm |
| US size (converted) | #11-11 |
| | Tolerances [inch] |
| Length | +/- 0.025 |
| Head diameter | +0 / -0.014 |
| Head height | +/- 0.005 |
| Thread diameter | +0.007 / -0 |

| | |
|---|---|
| Descripción | STP22A 5.0x25.0 - Z2 |
| Material | Acero Inoxidable A2 |
| Superficie | Laminado brillante, barnizado y pasivado |
| Peso | 2.908 kg / 1000 Piezas |

| | | |
|---|---|---|
| SCREWERK | **STP22A0500250E** | |
| _Zoll Zeichnung Größe A | Escalada 2:1 | 2024-10 |