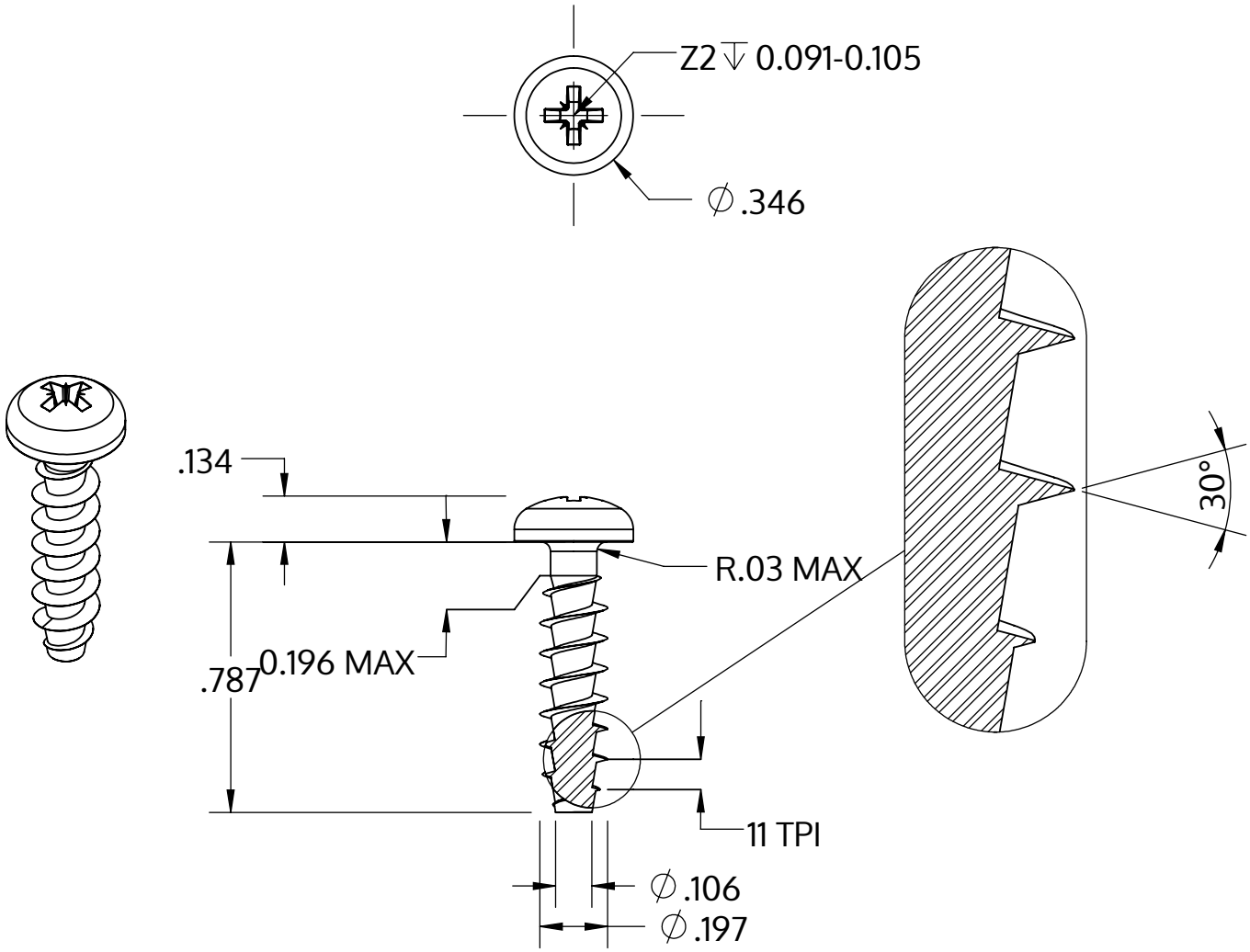


| | |
|---|---|
| Metric size | M5 x 2.24 mm |
| US size (converted) | #11-11 |
| | Tolerances [inch] |
| Length | +/- 0.025 |
| Head diameter | +0 / -0.014 |
| Head height | +/- 0.005 |
| Thread diameter | +0.007 / -0 |

| | |
|---|---|
| Beskrivelse | STP22A 5.0x20.0 - Z2 |
| Materiale | Ædelstål A2 |
| Overflade | blank, bejdset og passiveret |
| Vægt | 2.537 kg / 1000 stykke |

| | | |
|---|---|---|
| SCREWERK | **STP22A0500200E** | |
| _Zoll Zeichnung Größe A | Skalering 2:1 | 2024-10 |