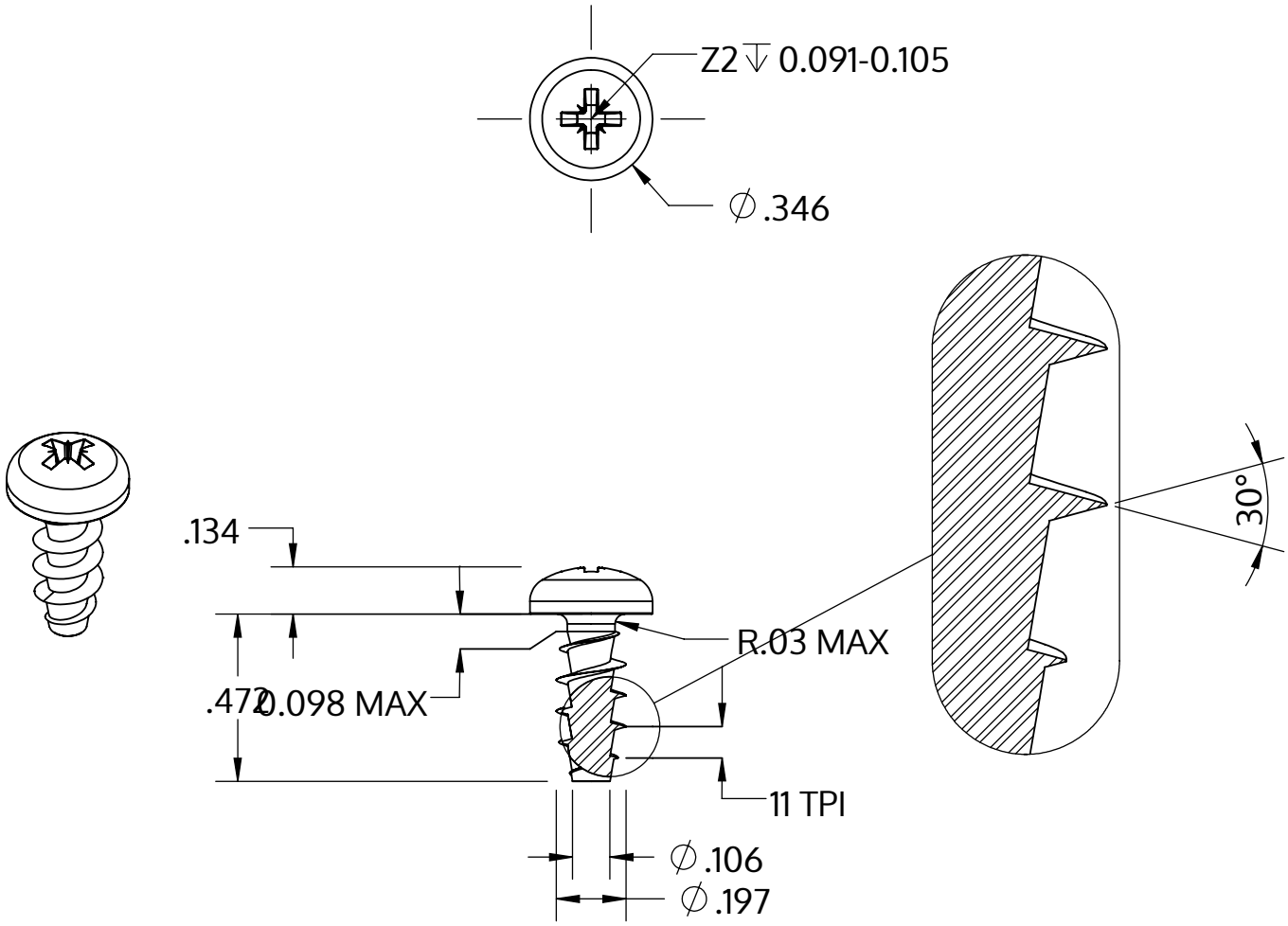

Metric size	M5 x 2.24 mm
US size (converted)	#11-11
	Tolerances [inch]
Length	+/- 0.021
Head diameter	+0 / -0.014
Head height	+/- 0.005
Thread diameter	+0.007 / -0

Description	STP22A 5.0x12.0 - Z2
Material	stainless-steel A2
Surface	bright, pickled and passivated
Weight	1.945 kg / 1000 pieces

SCREWERK	**STP22A0500120E**	
Inch Drawing Size A	Scale None:1	2024-04