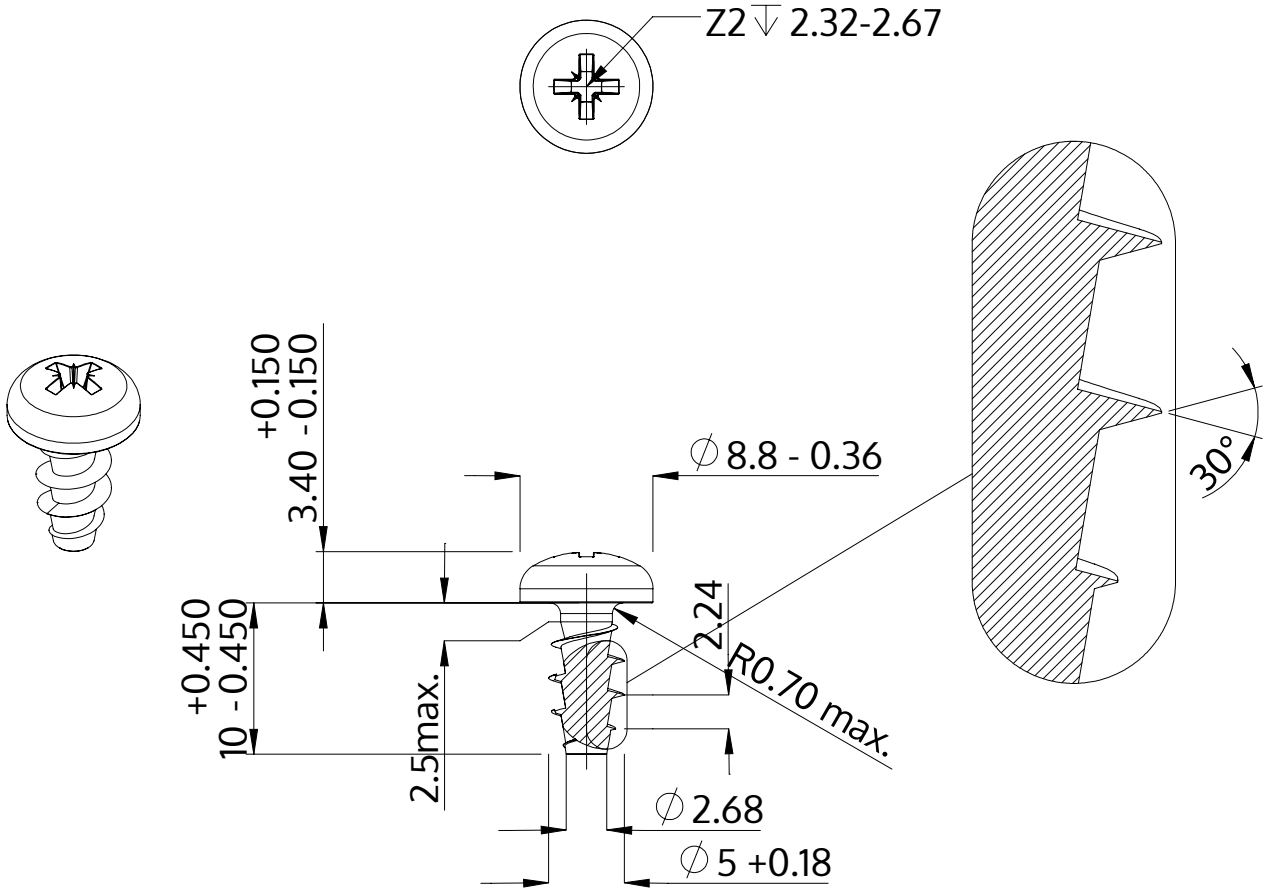

Description	STP22A 5.0x10.0 - Z2
Material	stainless-steel A2
Surface	bright, pickled and passivated
Weight	1.797 kg / 1000 pieces

SCREWERK	**STP22A0500100E**	
Metric Drawing A4	Scale None:1	2024-04