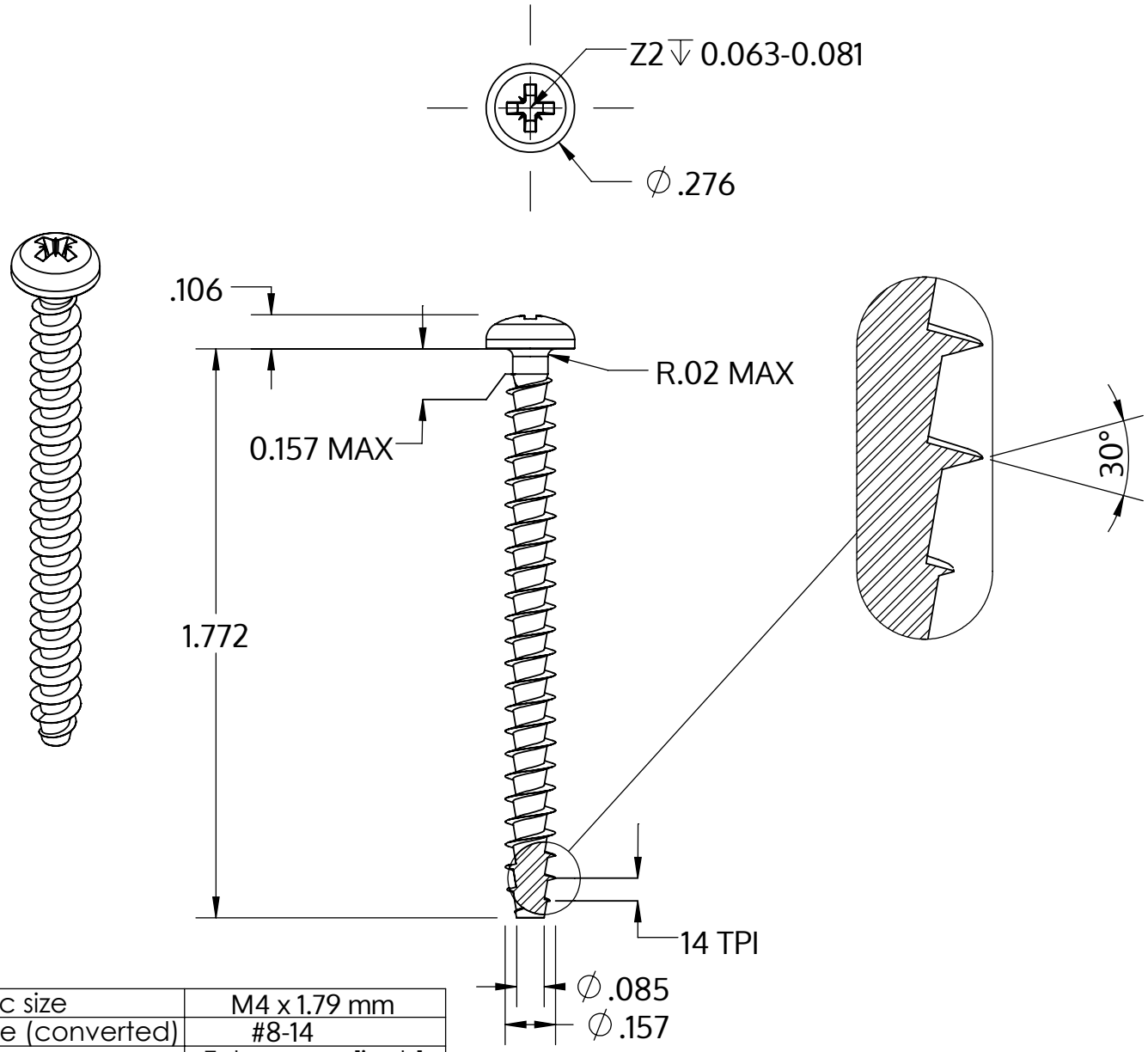

Metric size	M4 x 1.79 mm
US size (converted)	#8-14
	Tolerances [inch]
Length	+/- 0.031
Head diameter	+0 / -0.014
Head height	+/- 0.004
Thread diameter	+0.007 / -0

Description	STP22A 4.0x45.0 - Z2
Matière	acier inoxydable A2
Surface	brillant décapé et passivé
Poids	2.692 kg / 1000 Unité

SCREWERK	**STP22A0400450E**	
_Zoll Zeichnung Größe A	Redimensionner 2:1	2024-10