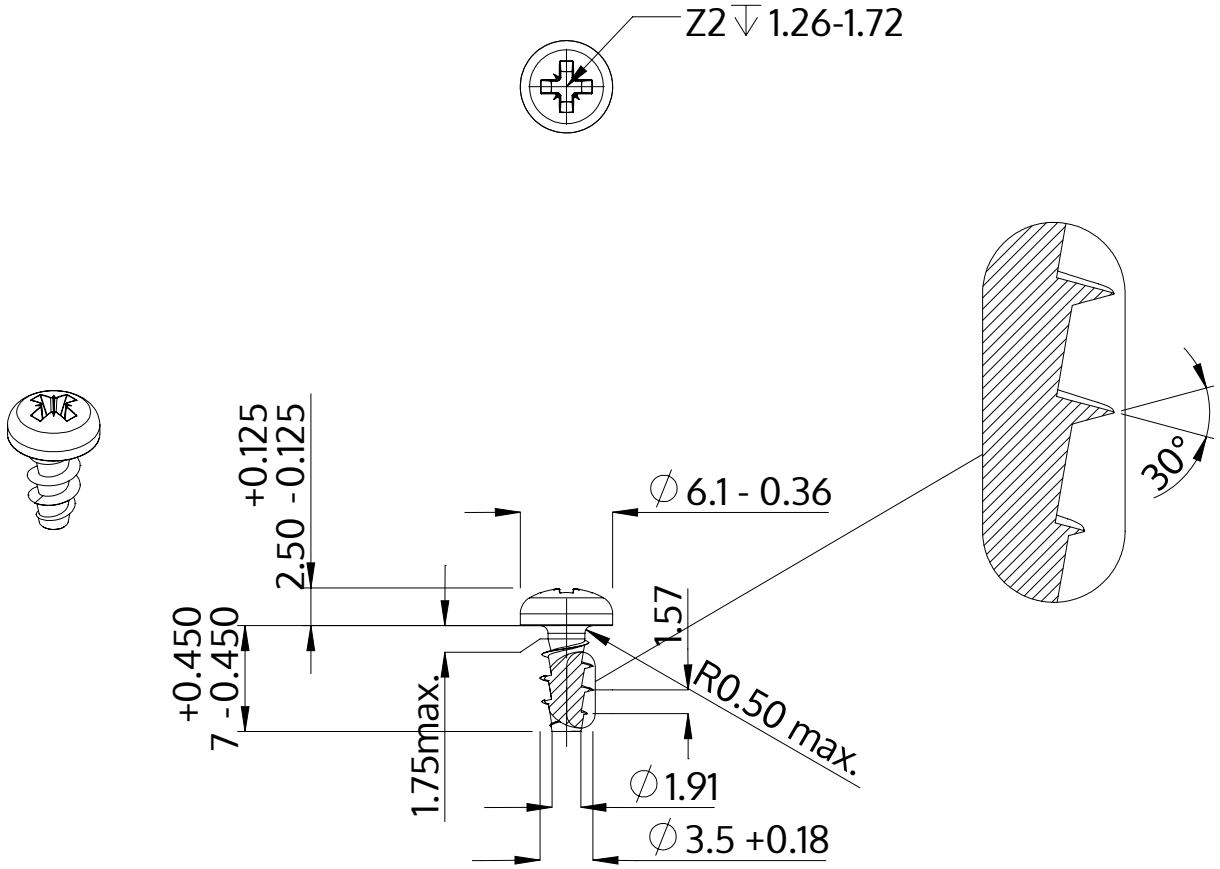

Description	STP22A 3.5x7.0 - Z2
Material	steel, hardened
Surface	zinc-plated 5-7 µm, baked, blue / transparent passivated
Weight	0.627 kg / 1000 pieces

SCREWERK	**STP22A0350070S**	
Metric Drawing A4	Scale None:1	2024-04