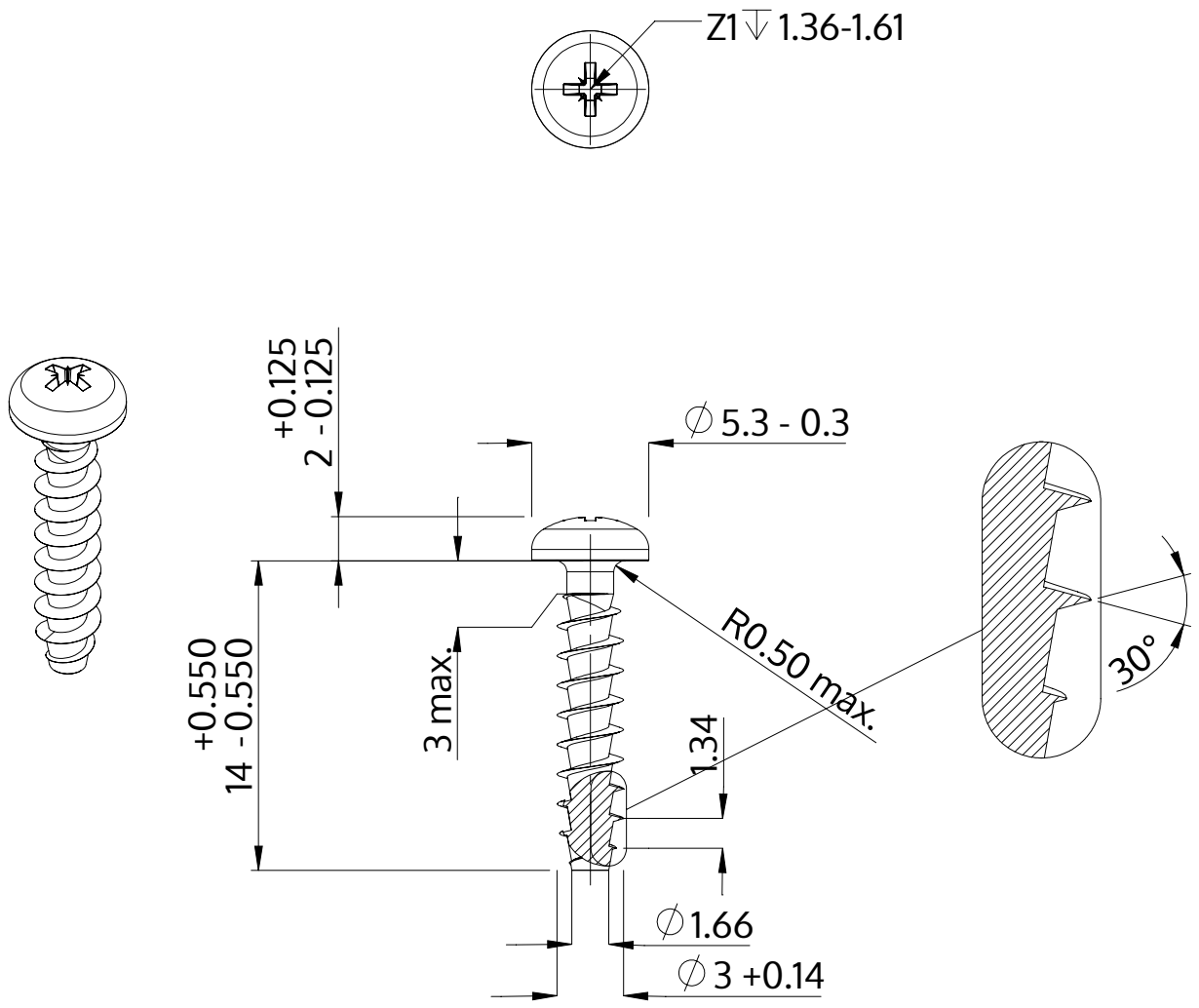

Description	STP22A 3.0x14.0 - Z1
Material	stainless-steel A2
Surface	bright, pickled and passivated
Weight	0.625 kg / 1000 pieces

SCREWERK	**STP22A0300140E**	
Metric Drawing A4	Scale 3:1	2024-10