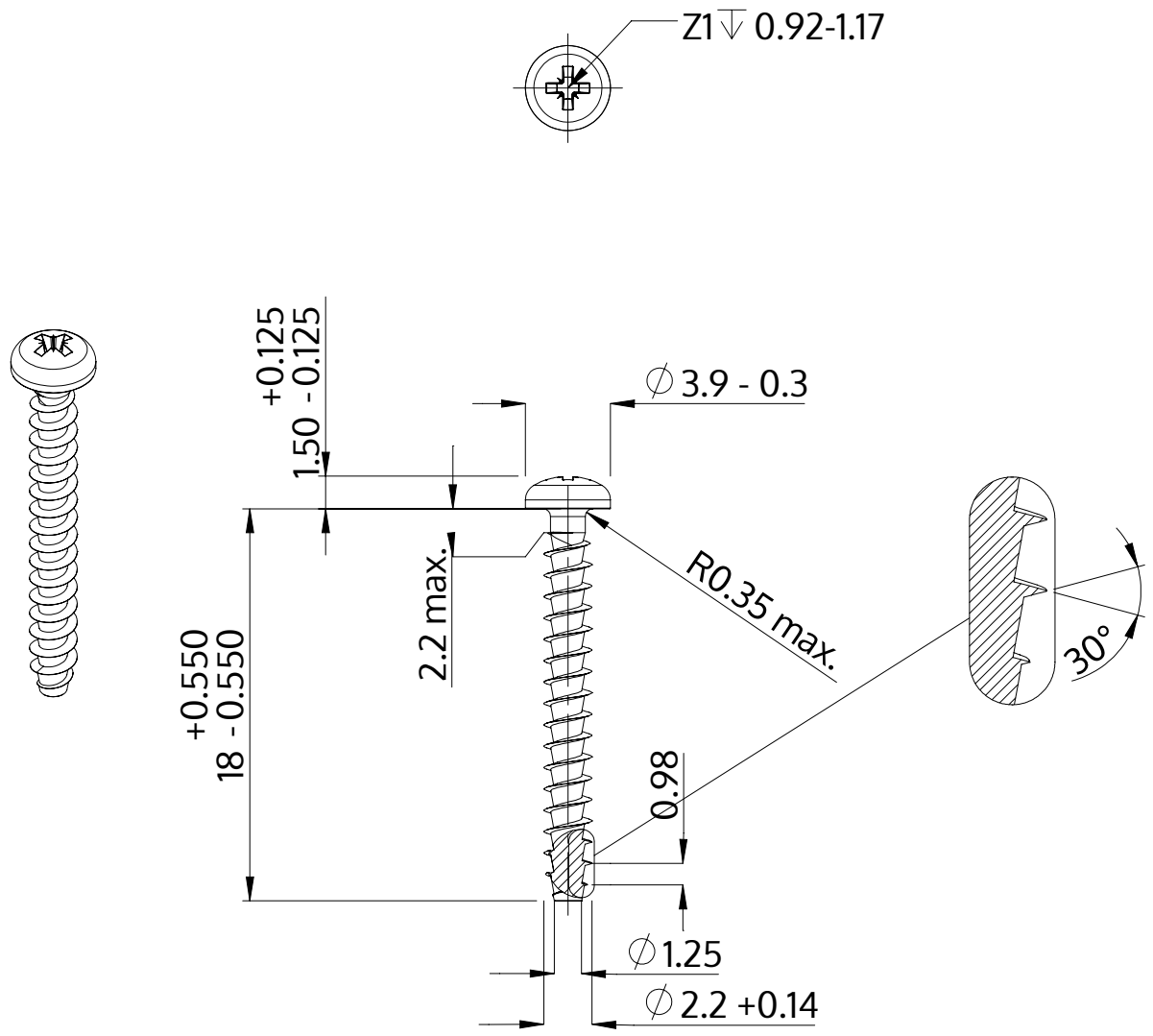

Description	STP22A 2.2x18.0 - Z1
Material	steel, hardened
Surface	zinc-plated 5-7 µm, baked, blue / transparent passivated
Weight	0.378 kg / 1000 pieces

SCREWERK	**STP22A0220180S**	
Metric Drawing A4	Scale 3:1	2024-10