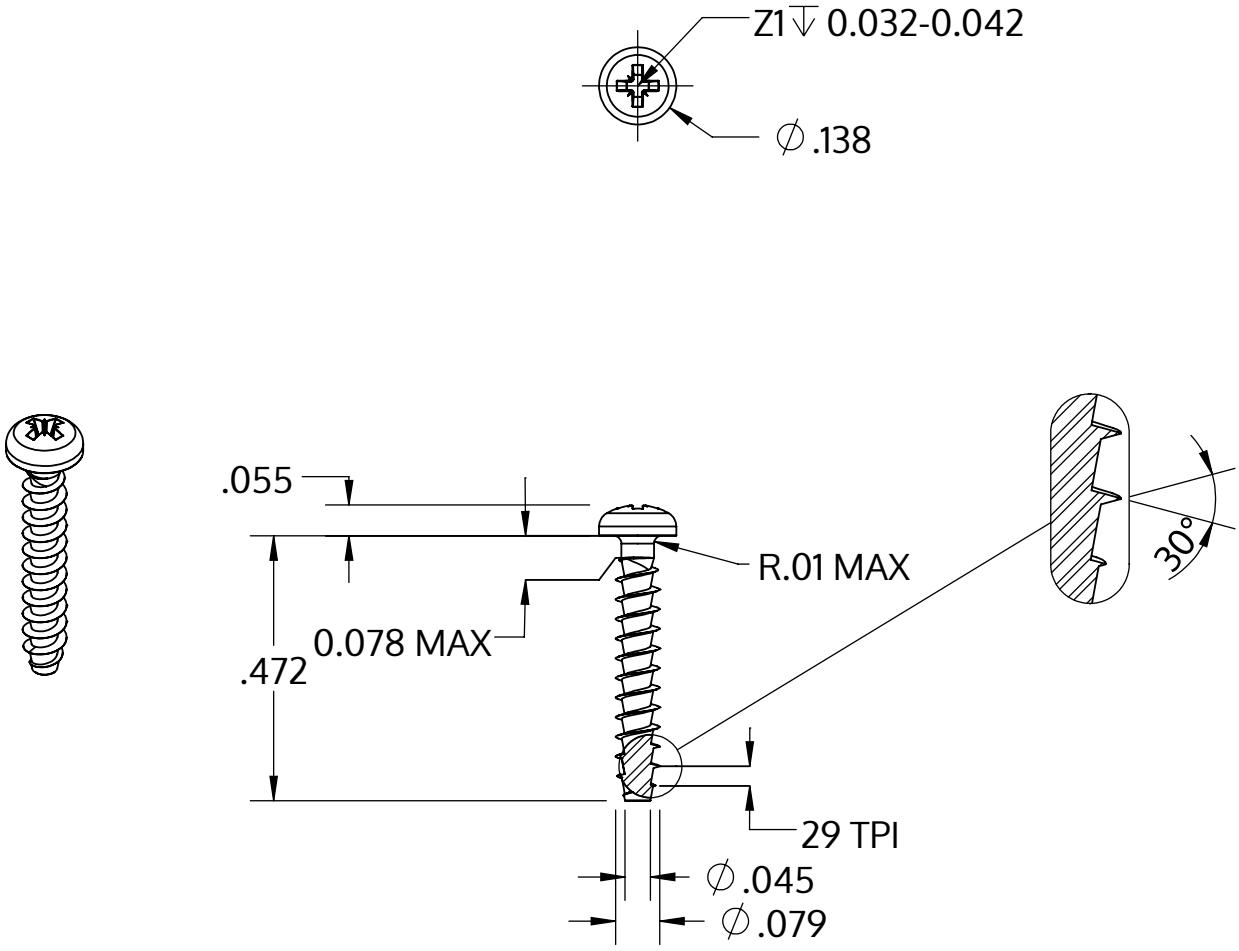

Metric size	M2 x 0.89 mm
US size (converted)	#1.5-29
	Tolerances [inch]
Length	+/- 0.021
Head diameter	+0 / -0.011
Head height	+/- 0.004
Thread diameter	+0.005 / -0

Descriere	STP22A 2.0x12.0 - Z1
Material	oțel, călit
Exterior	zincat 5-7 µm, recopt, pasivat transparent/albastru
Greutate	0.239 kg / 1000 unități

SCREWERK	**STP22A0200120S**	
_Zoll Zeichnung Größe A	Scalarea 3:1	2024-10