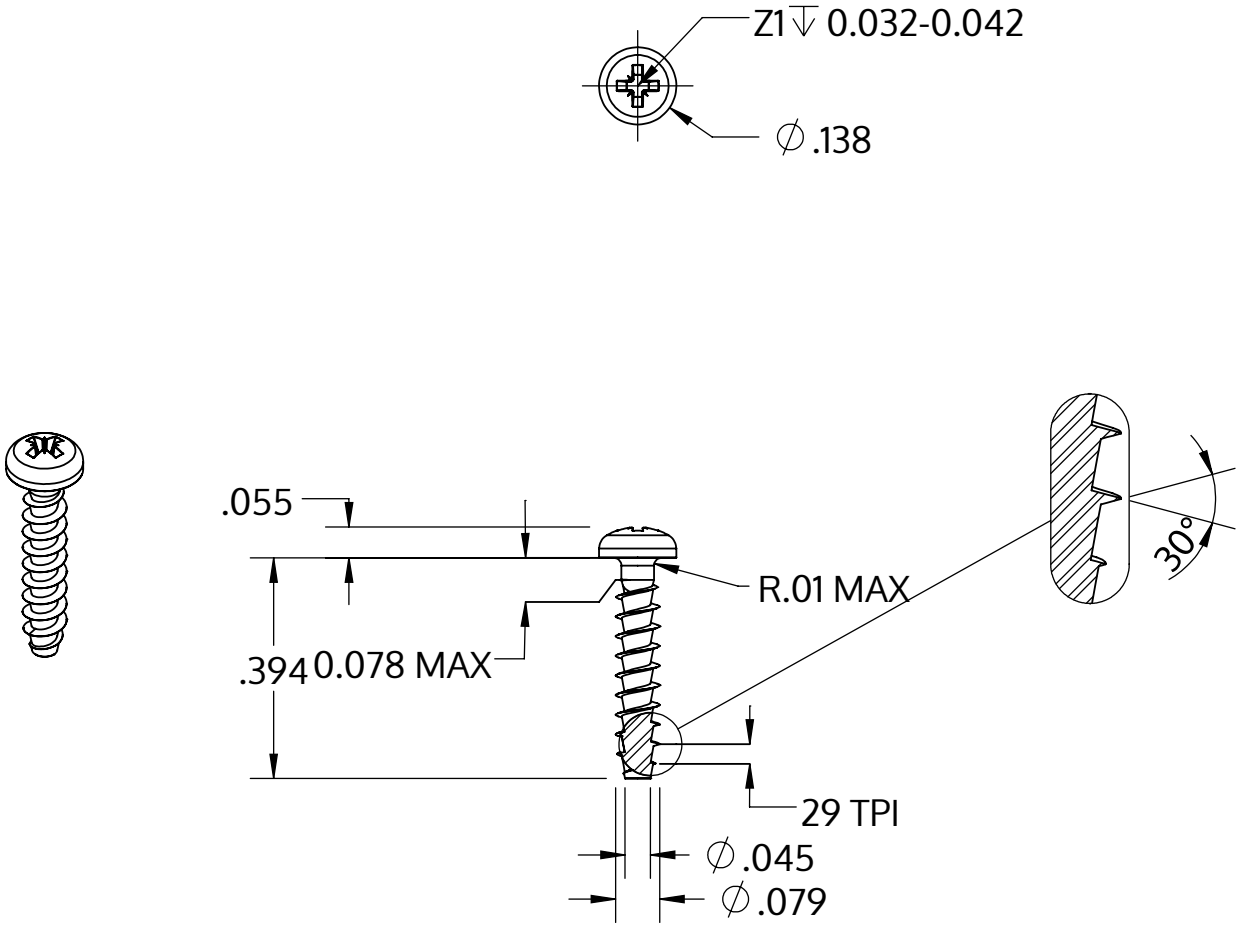

Metric size	M2 x 0.89 mm
US size (converted)	#1.5-29
	Tolerances [inch]
Length	+/- 0.017
Head diameter	+0 / -0.011
Head height	+/- 0.004
Thread diameter	+0.005 / -0

Description	STP22A 2.0x10.0 - Z1
Matière	acier inoxydable A2
Surface	brillant décapé et passivé
Poids	0.210 kg / 1000 Unité

SCREWERK	**STP22A0200100E**	
_Zoll Zeichnung Größe A	Redimensionner 3:1	2024-10