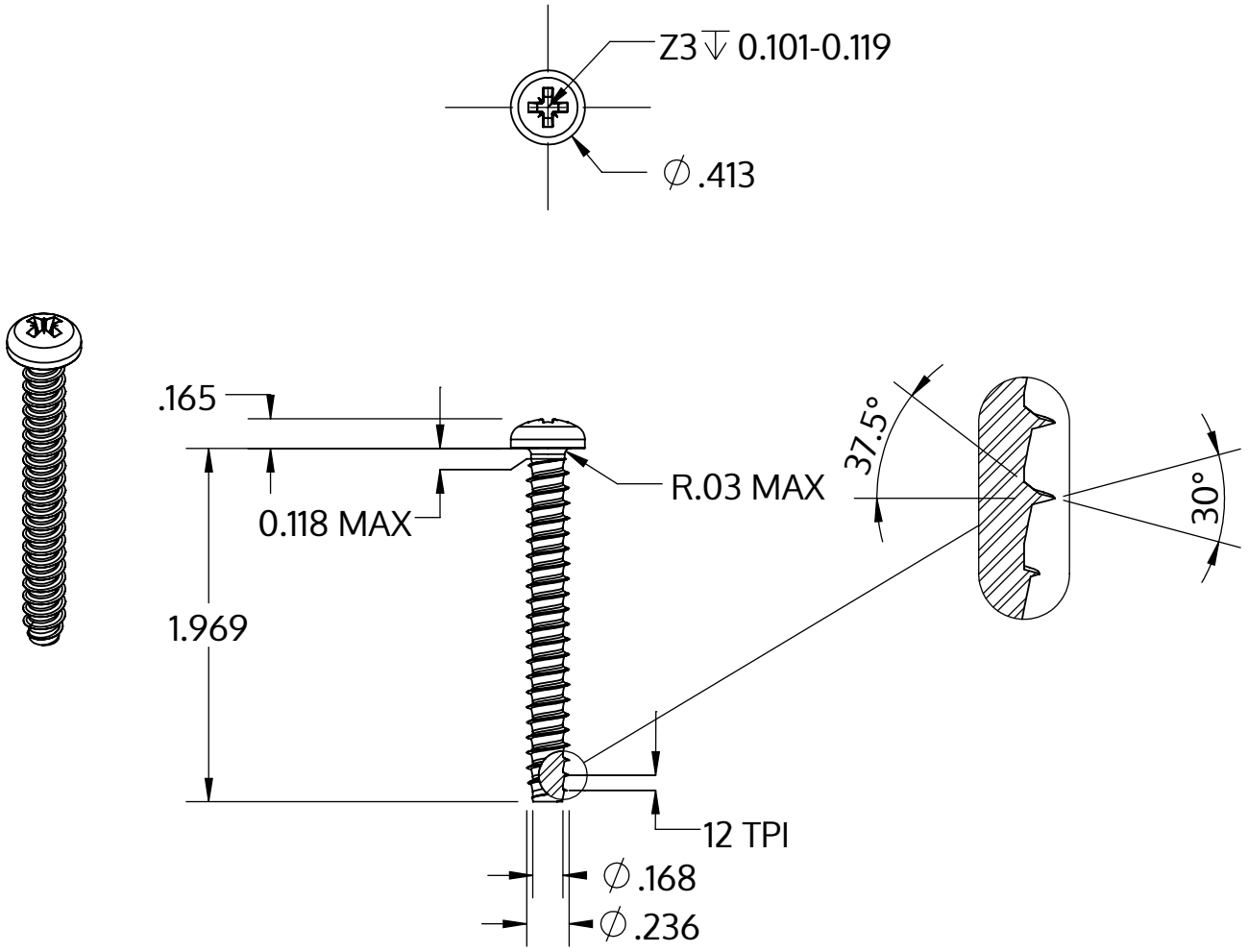


| | |
|---|---|
| Metric size | M6 x 2.14 mm |
| US size (converted) | #0.236-12 |
| | Tolerances [inch] |
| Length | +/- 0.031 |
| Head diameter | +0 / -0.016 |
| Head height | +/- 0.005 |
| Thread diameter | +0.005 / -0 |

| | |
|---|---|
| Beschrijving | STP22 6.0x50.0 - Z3 |
| Materiaal | roestvrij staal A4 |
| Oppervlak | blank, geetst en gepassieveerd |
| Gewicht | 8.666 kg / 1000 stuk |

| | | |
|---|---|---|
| SCREWERK | **STP220600500C** | |
| _Zoll Zeichnung Größe A | Schaal 1:1 | 2024-10 |