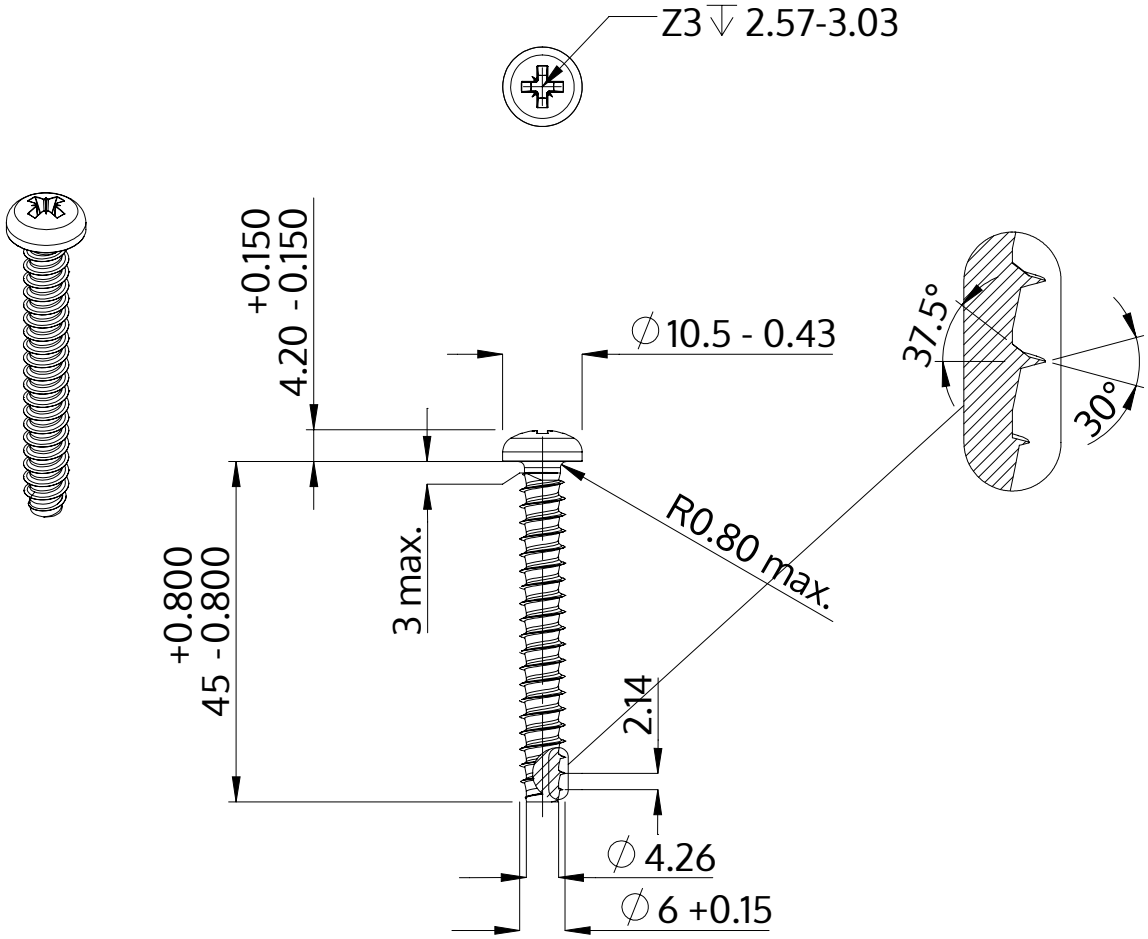

Description	STP22 6.0x45.0 - Z3
Material	steel, hardened
Surface	Zinc-Nickel-plated min. 5µm, passivated black/ Cr-VI-free, baked, sealed
Weight	7.987 kg / 1000 pieces

SCREWERK	**STP220600450B**	
Metric Drawing A4	Scale 1:1	2024-10