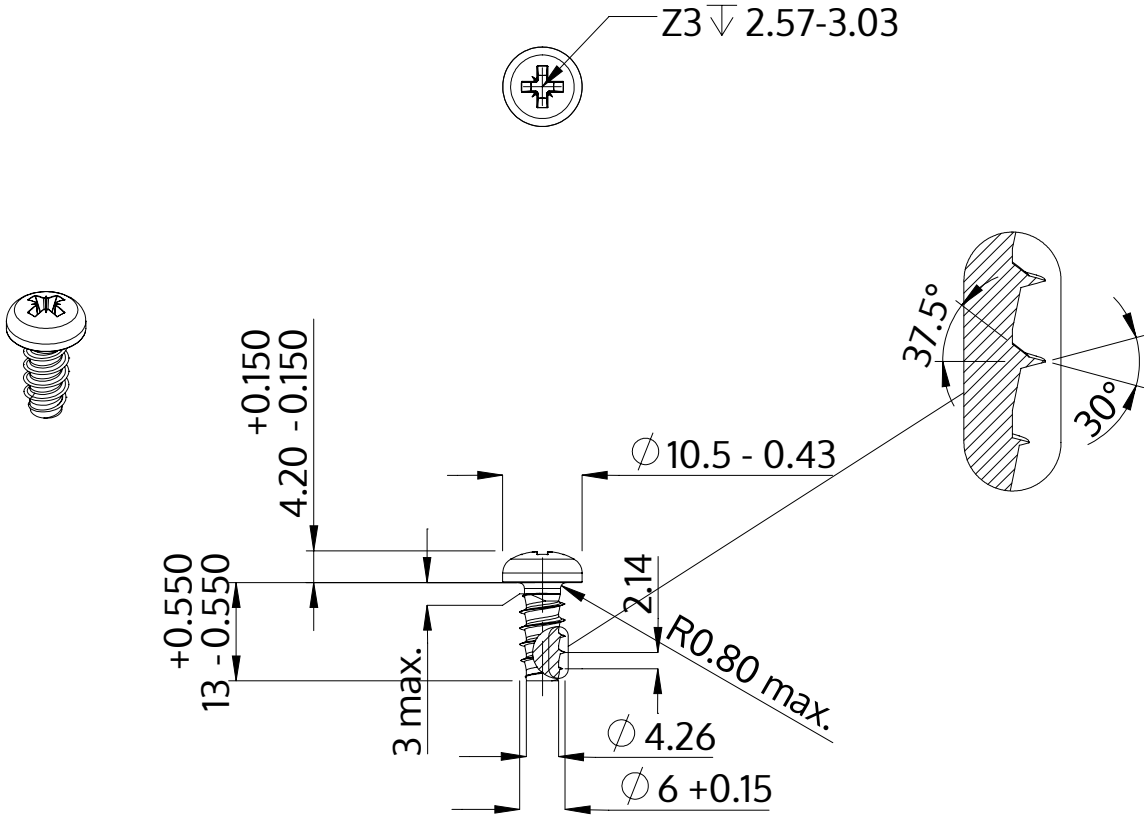

Description	STP22 6.0x13.0 - Z3
Material	stainless-steel A2
Surface	bright, pickled and passivated
Weight	3.647 kg / 1000 pieces

SCREWERK	**STP220600130E**	
Metric Drawing A4	Scale 1:1	2024-10