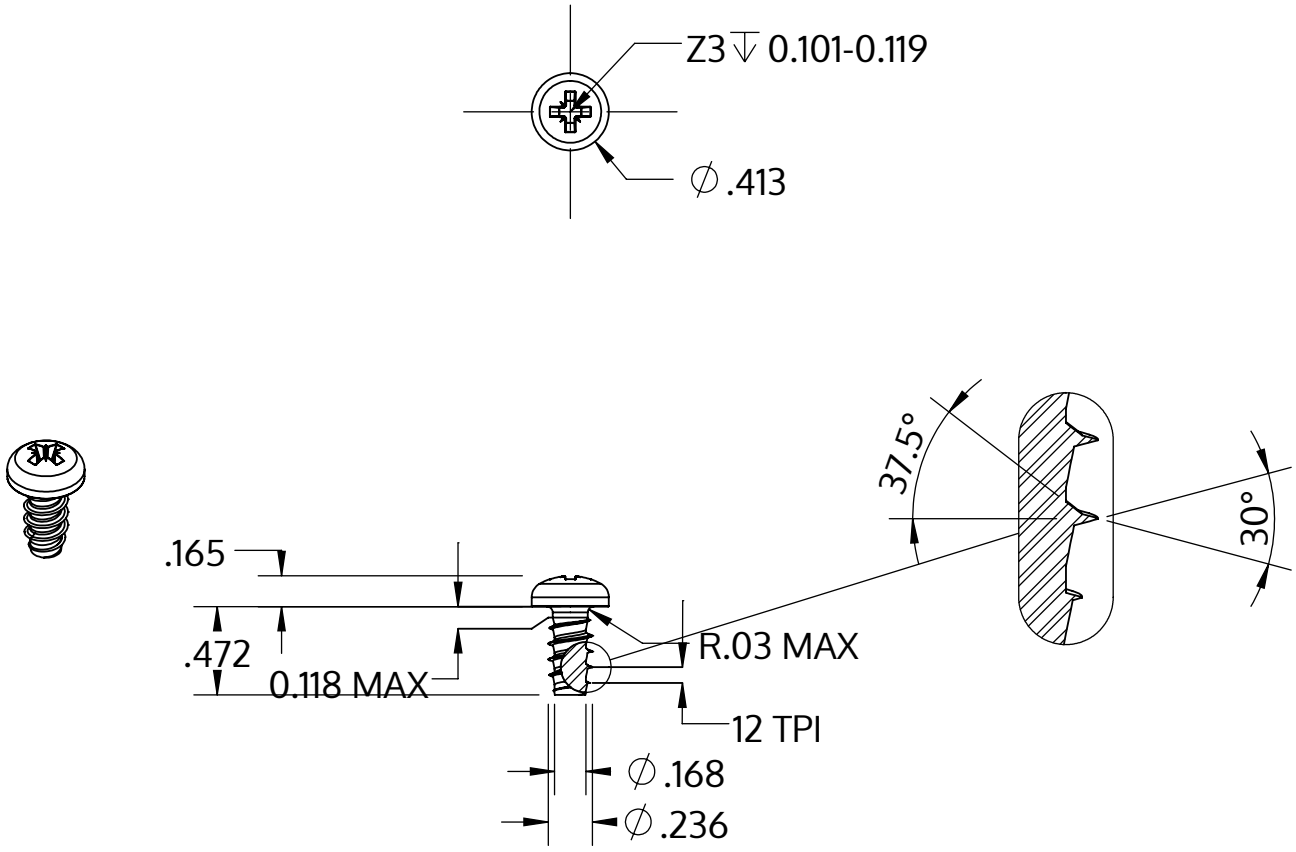

Metric size	M6 x 2.14 mm
US size (converted)	#0.236-12
	Tolerances [inch]
Length	+/- 0.021
Head diameter	+0 / -0.016
Head height	+/- 0.005
Thread diameter	+0.005 / -0

Description	STP22 6.0x12.0 - Z3
Material	stainless steel A4
Surface	bright, pickled and passivated
Weight	3.511 kg / 1000 pieces

SCREWERK	**STP220600120C**	
Inch Drawing Size A	Scale 1:1	2024-10