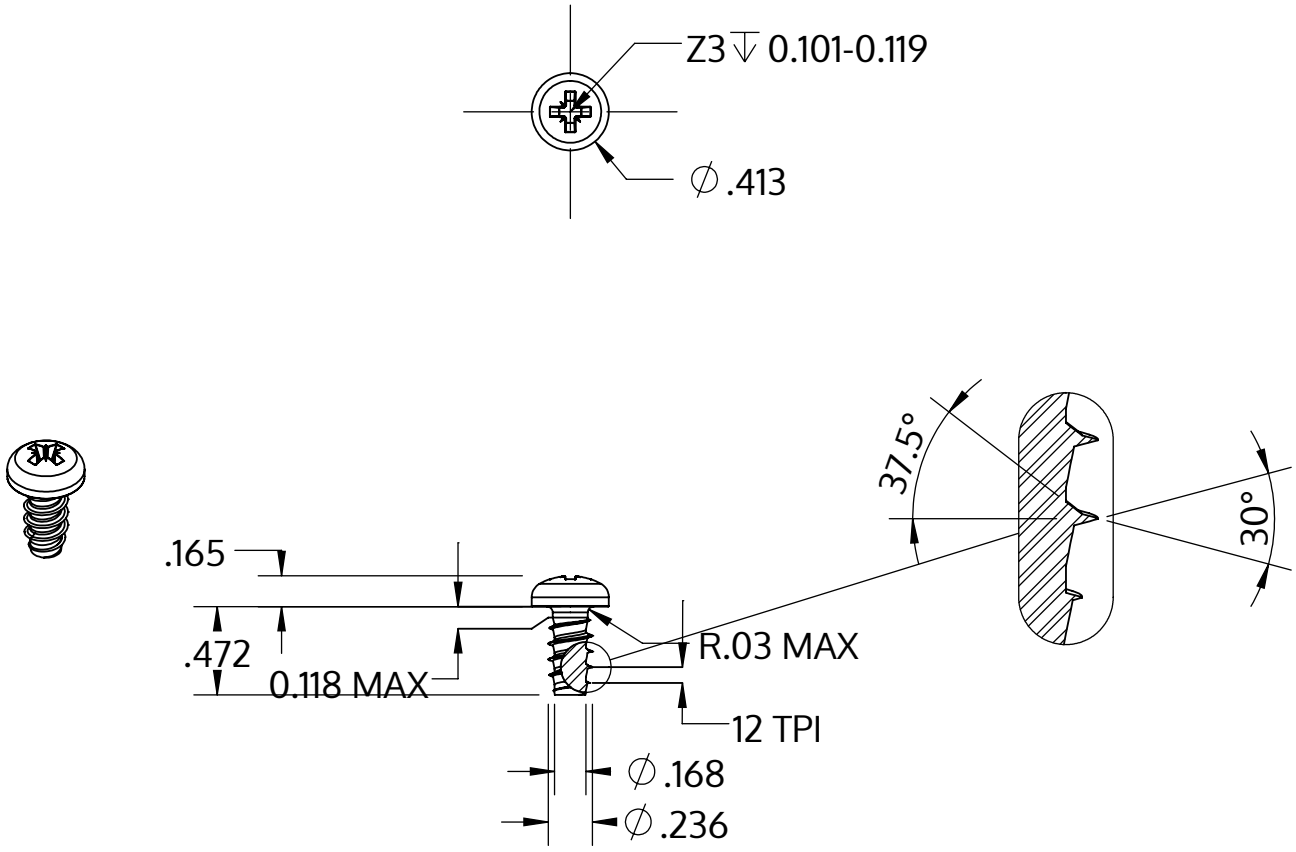


| | |
|---|---|
| Metric size | M6 x 2.14 mm |
| US size (converted) | #0.236-12 |
| | Tolerances [inch] |
| Length | +/- 0.021 |
| Head diameter | +0 / -0.016 |
| Head height | +/- 0.005 |
| Thread diameter | +0.005 / -0 |

| | |
|---|---|
| Beskrivelse | STP22 6.0x12.0 - Z3 |
| Materiale | Ædelstål A4 |
| Overflade | blank, bejdset og passiveret |
| Vægt | 3.511 kg / 1000 stykke |

| | | |
|---|---|---|
| SCREWERK | **STP220600120C** | |
| _Zoll Zeichnung Größe A | Skalering 1:1 | 2024-10 |