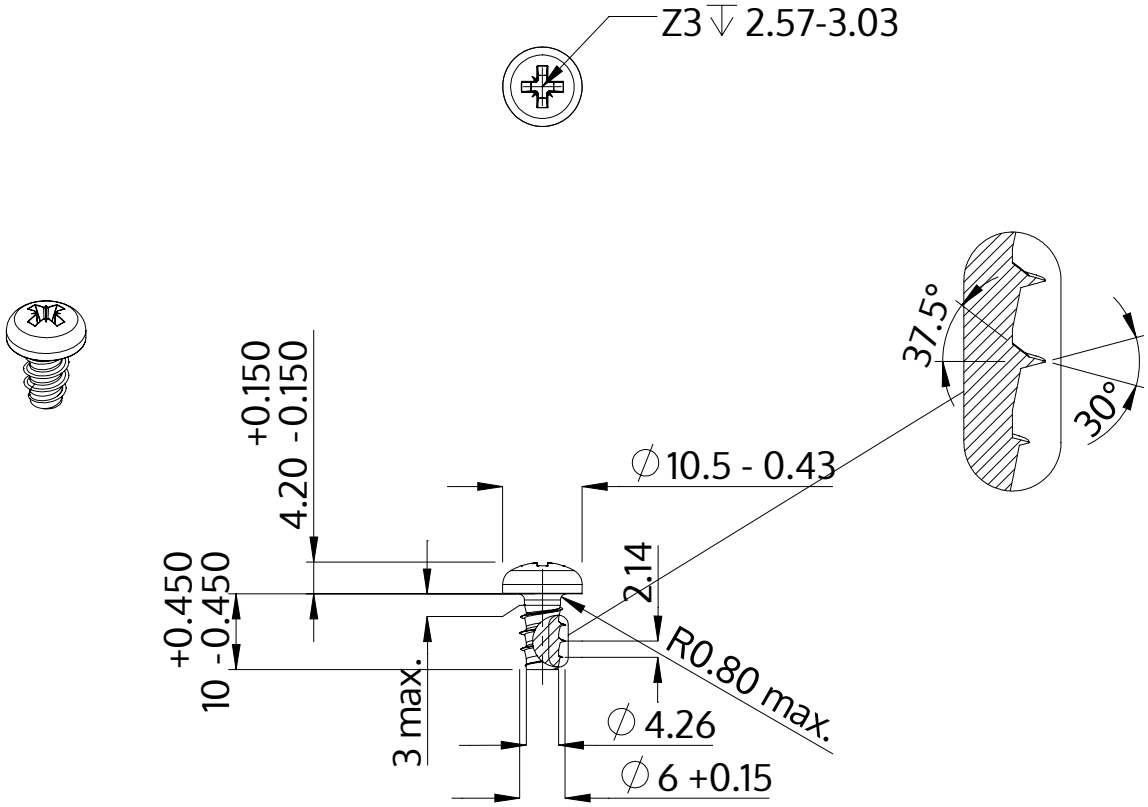

Description	STP22 6.0x10.0 - Z3
Material	stainless steel A4
Surface	bright, pickled and passivated
Weight	3.240 kg / 1000 pieces

SCREWERK	**STP220600100C**	
Metric Drawing A4	Scale 1:1	2024-10