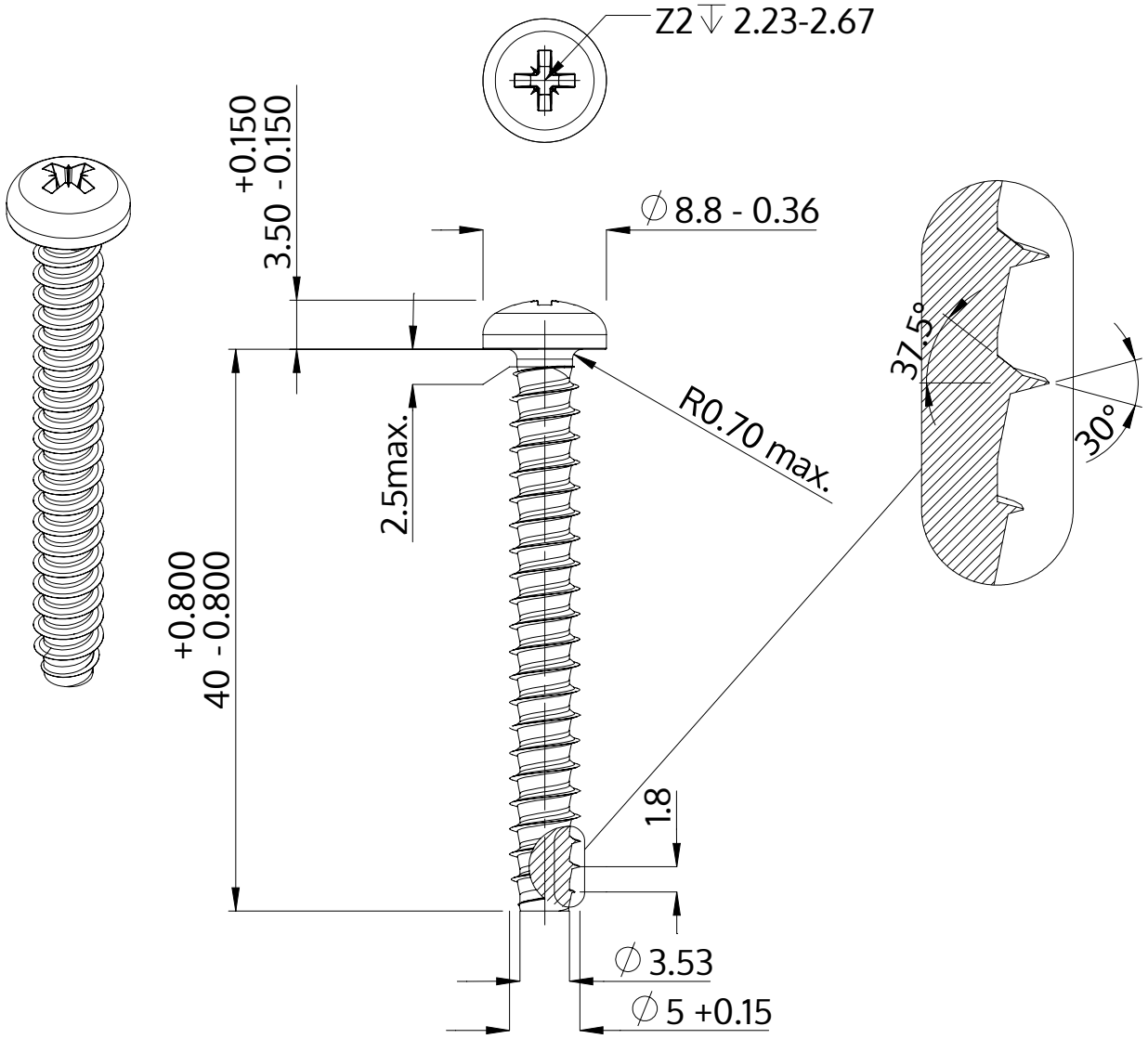

Description	STP22 5.0x40.0 - Z2
Material	stainless-steel A2
Surface	bright, pickled and passivated
Weight	4.898 kg / 1000 pieces

SCREWERK	**STP220500400E**	
Metric Drawing A4	Scale 2:1	2024-10