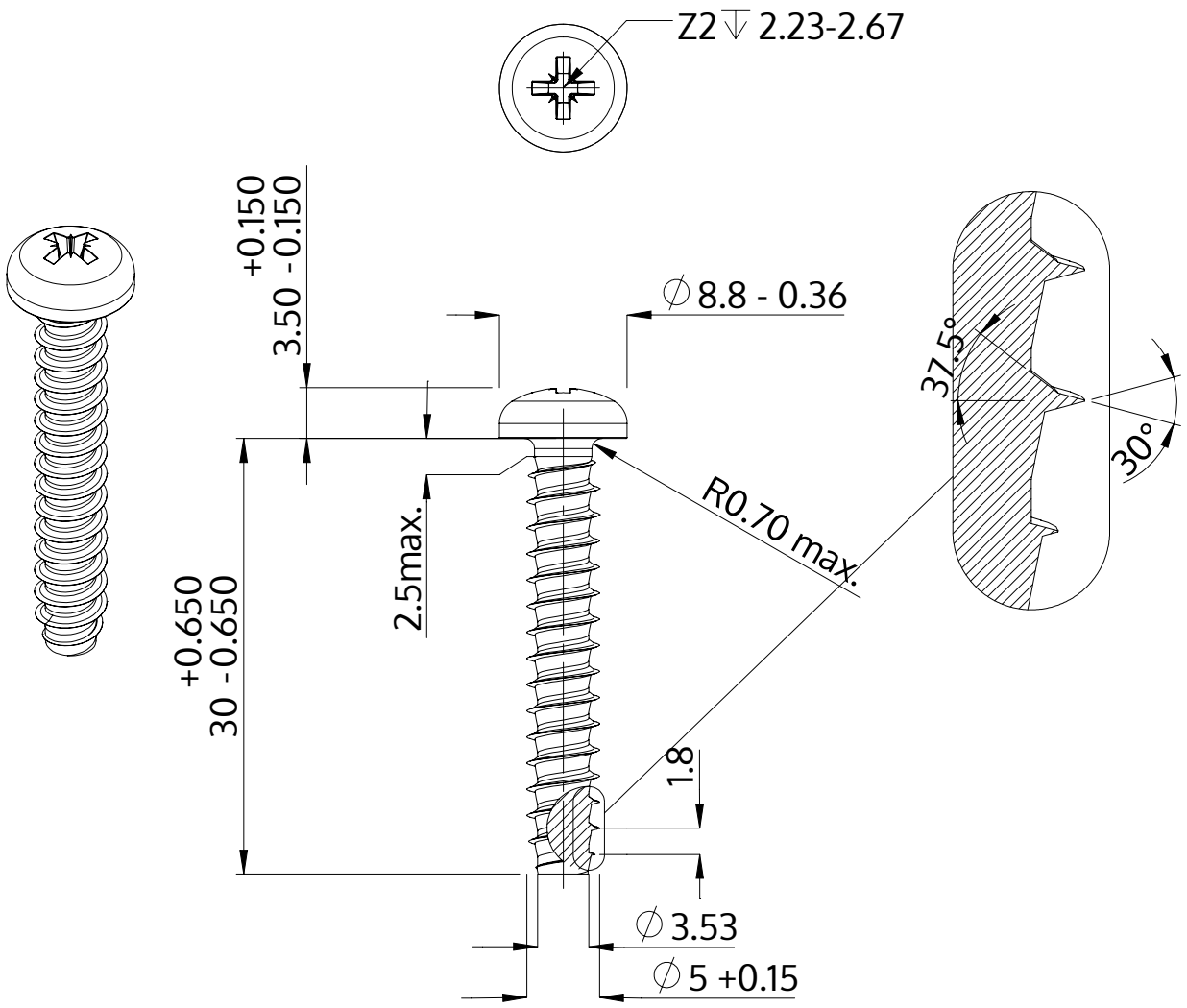

Description	STP22 5.0x30.0 - Z2
Material	stainless-steel A2
Surface	bright, pickled and passivated
Weight	3.952 kg / 1000 pieces

SCREWERK	**STP220500300E**	
Metric Drawing A4	Scale 2:1	2024-10