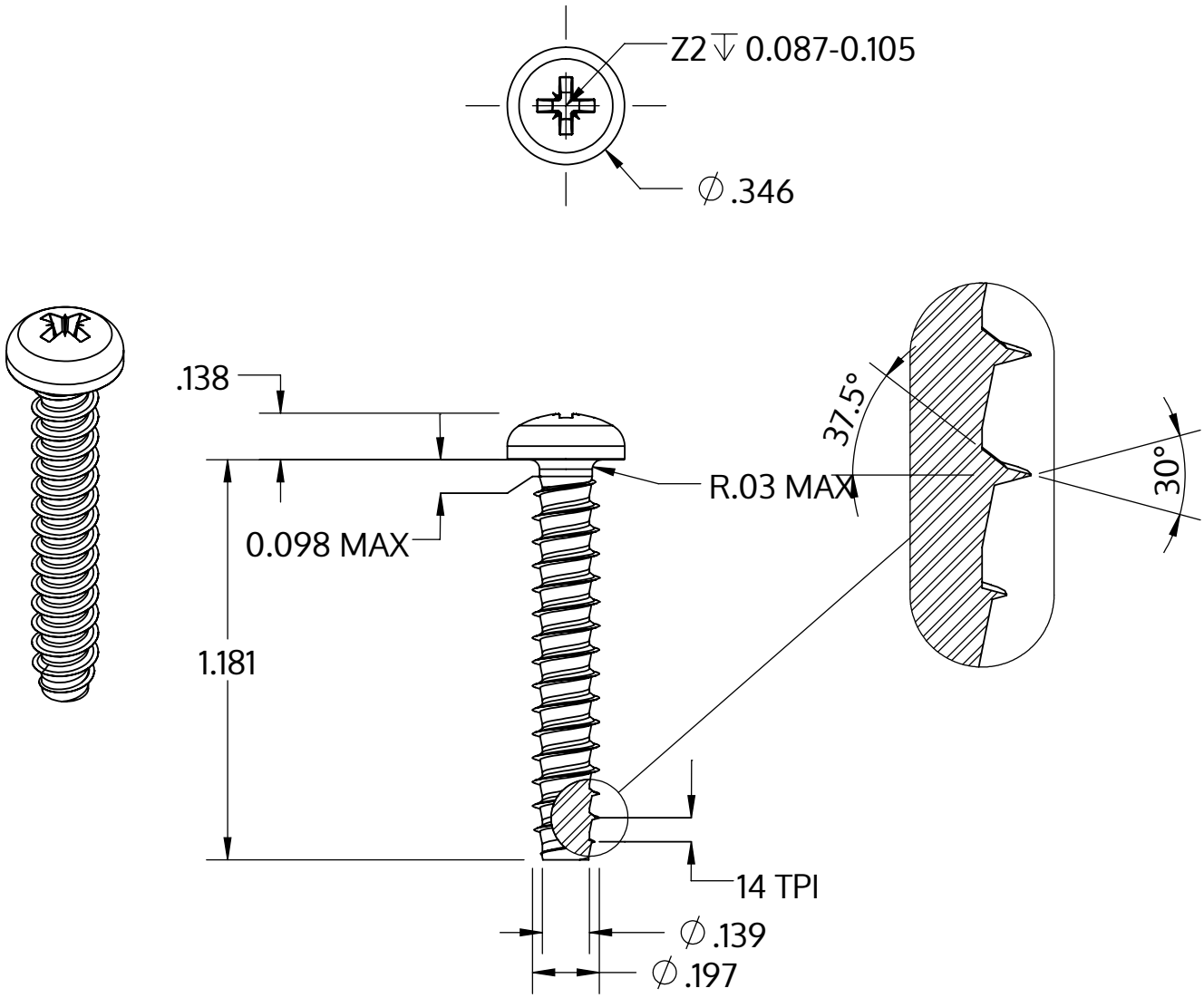


| | |
|---|---|
| Metric size | M5 x 1.8 mm |
| US size (converted) | #11-14 |
| | Tolerances [inch] |
| Length | +/- 0.025 |
| Head diameter | +0 / -0.014 |
| Head height | +/- 0.005 |
| Thread diameter | +0.005 / -0 |

| | |
|---|---|
| Beschrijving | STP22 5.0x30.0 - Z2 |
| Materiaal | roestvrij staal A4 |
| Oppervlak | blank, geetst en gepassieveerd |
| Gewicht | 3.952 kg / 1000 stuk |

| | | |
|---|---|---|
| SCREWERK | **STP220500300C** | |
| _Zoll Zeichnung Größe A | Schaal 2:1 | 2024-10 |