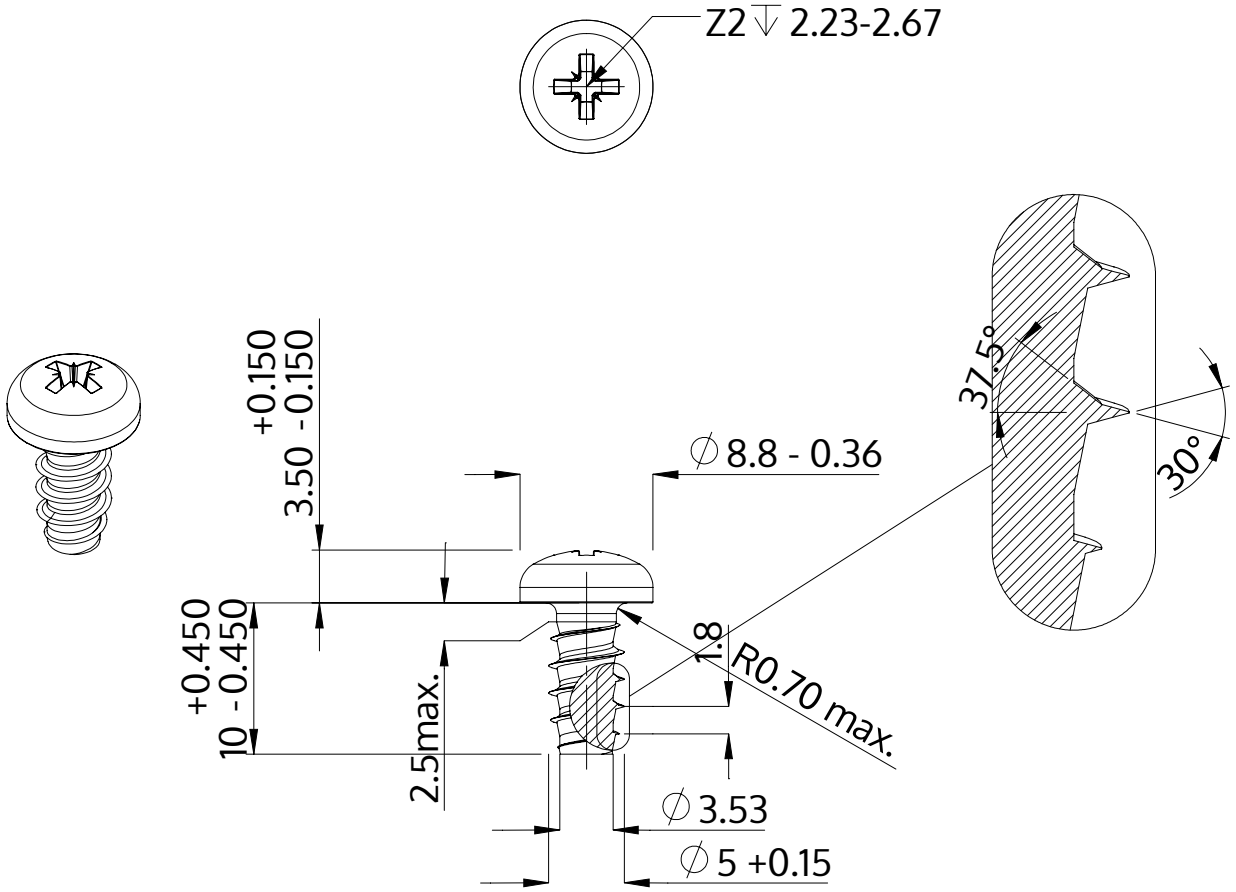

Description	STP22 5.0x10.0 - Z2
Material	steel, hardened
Surface	zinc-plated 5-7 µm, baked, blue / transparent passivated
Weight	2.060 kg / 1000 pieces

SCREWERK	**STP220500100S**	
Metric Drawing A4	Scale None:1	2024-04