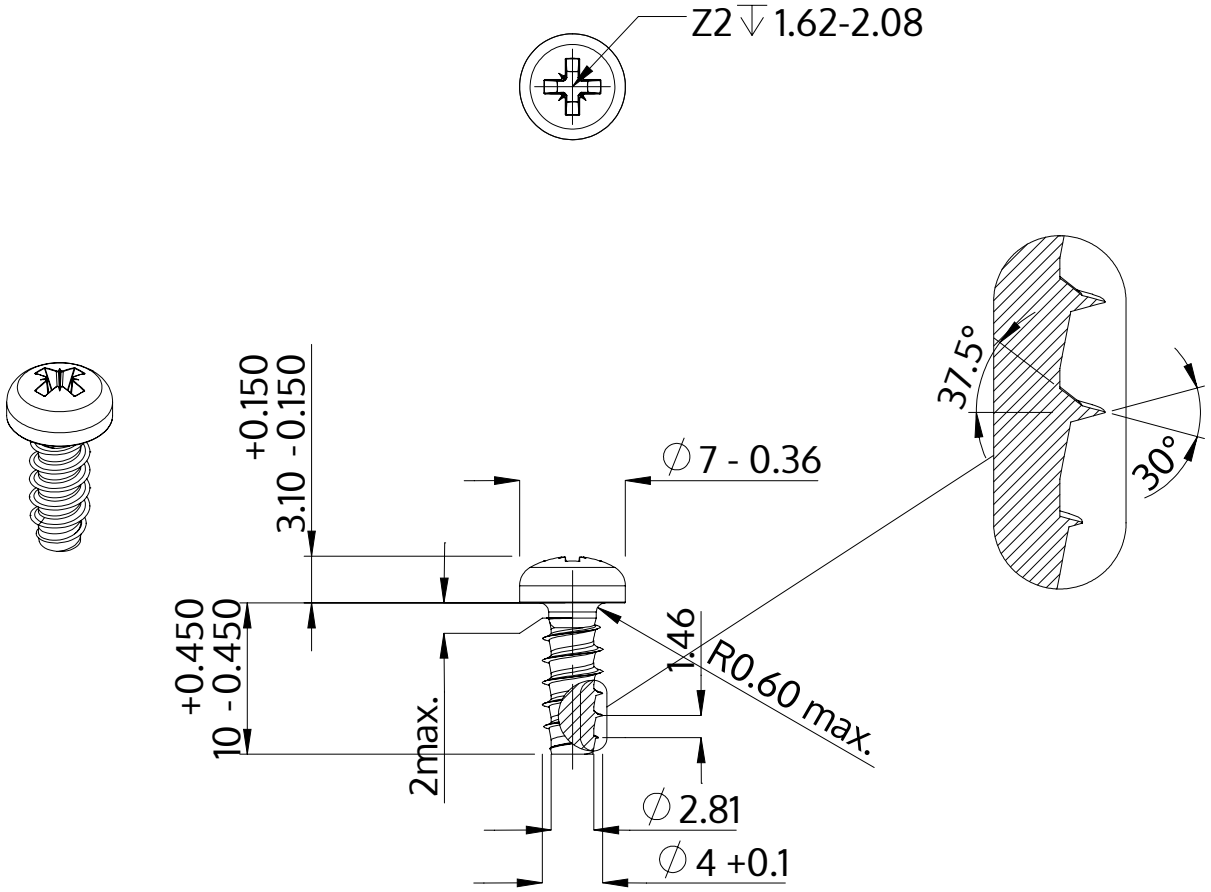

Description	STP22 4.0x10.0 - Z2
Material	stainless steel A4
Surface	bright, pickled and passivated
Weight	1.219 kg / 1000 pieces

SCREWERK	**STP220400100C**	
Metric Drawing A4	Scale 2:1	2024-10