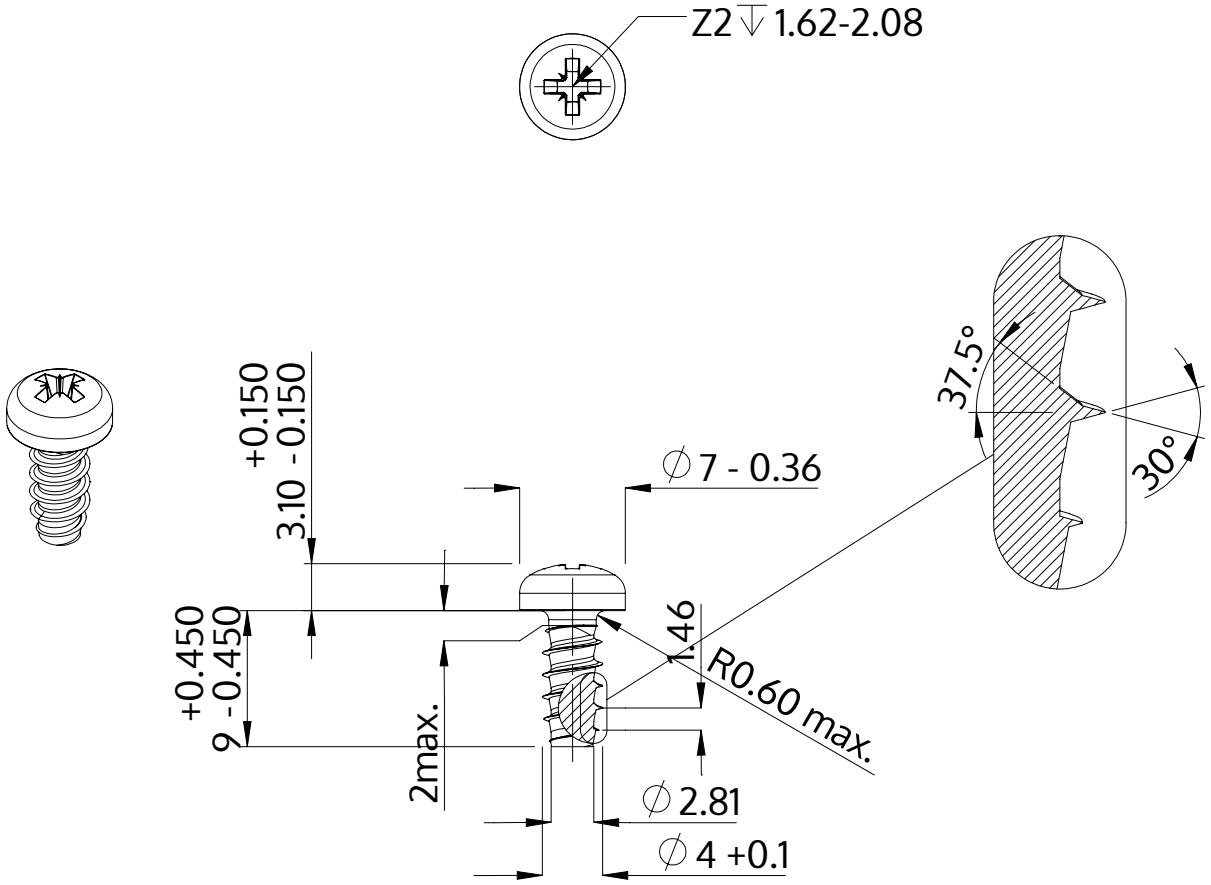

Description	STP22 4.0x9.0 - Z2
Material	steel, hardened
Surface	zinc-plated 5-7 µm, baked, blue / transparent passivated
Weight	1.159 kg / 1000 pieces

SCREWERK	**STP220400090S**	
Metric Drawing A4	Scale 2:1	2024-10