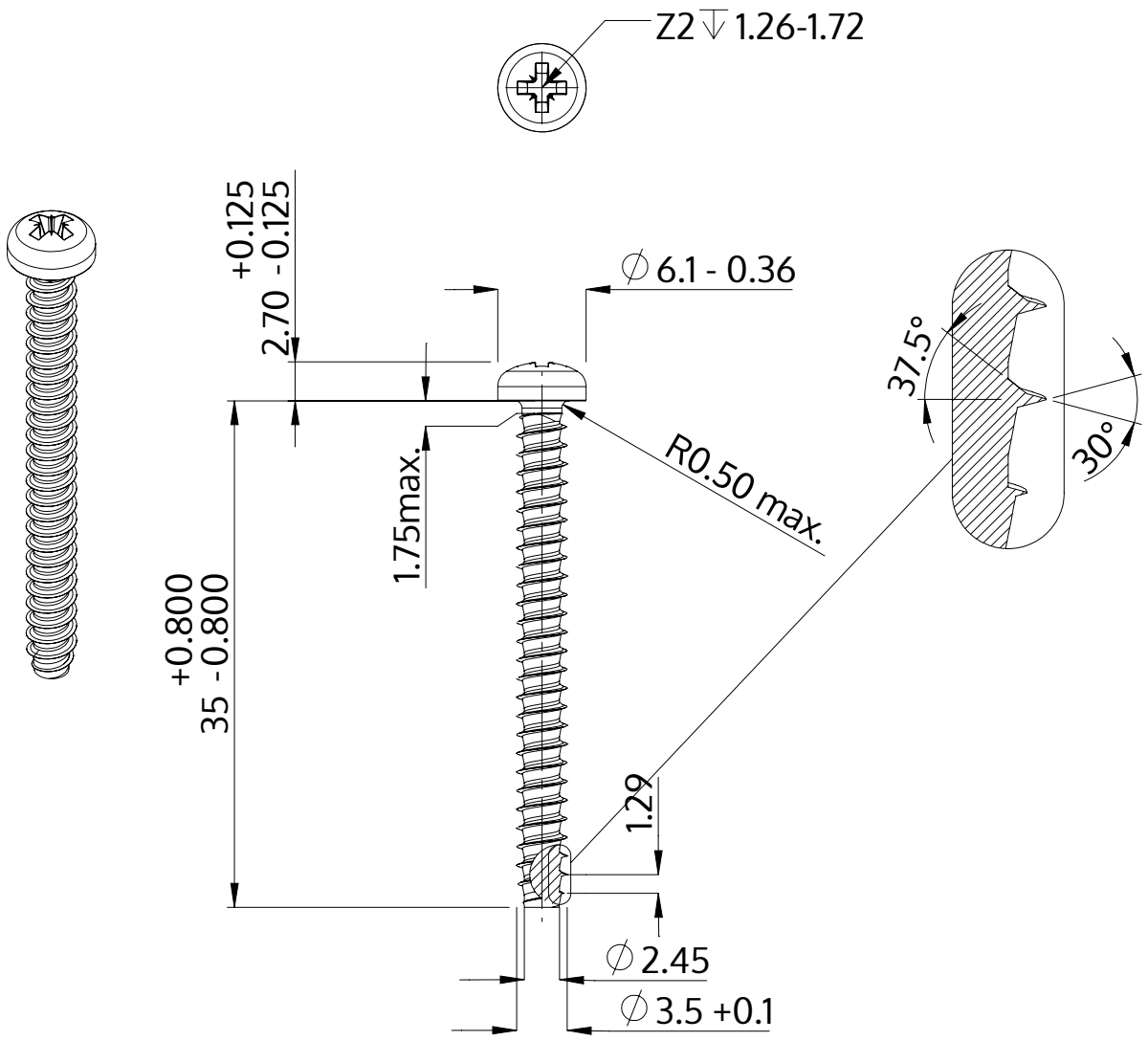

Description	STP22 3.5x35.0 - Z2
Material	stainless-steel A2
Surface	bright, pickled and passivated
Weight	2.070 kg / 1000 pieces

SCREWERK	**STP220350350E**	
Metric Drawing A4	Scale None:1	2024-04