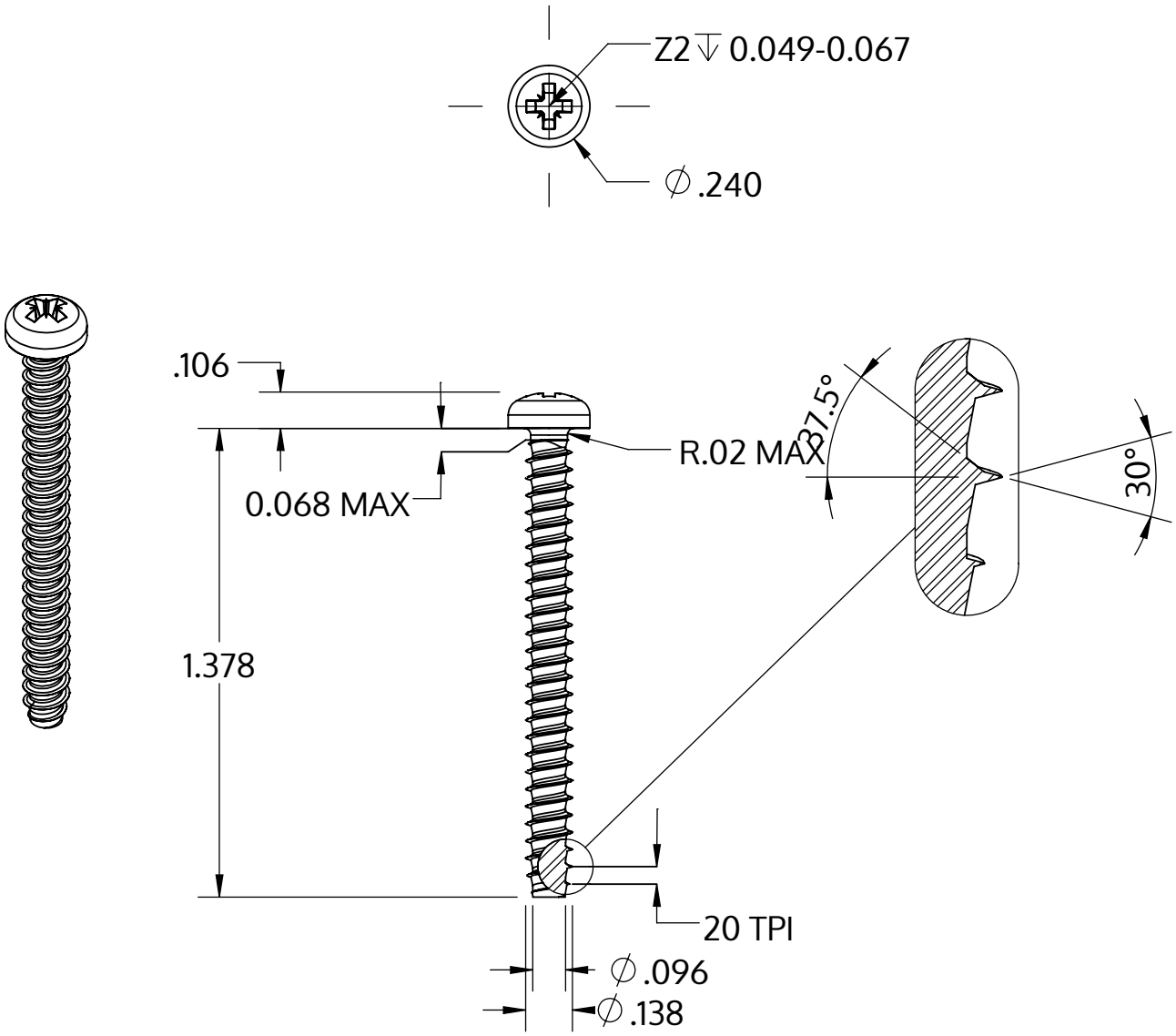


| | |
|---|---|
| Metric size | M3.5 x 1.29 mm |
| US size (converted) | #6-20 |
| | Tolerances [inch] |
| Length | +/- 0.031 |
| Head diameter | +0 / -0.014 |
| Head height | +/- 0.004 |
| Thread diameter | +0.003 / -0 |

| | |
|---|---|
| Descripción | STP22 3.5x35.0 - Z2 |
| Material | Acero, endurecido |
| Superficie | Zinc-Niquelado, pasivado negro/ sin Cr-VI, recocido, sellado |
| Peso | 2.070 kg / 1000 Piezas |

| | | |
|---|---|---|
| SCREWERK | **STP220350350B** | |
| _Zoll Zeichnung Größe A | Escalada 2:1 | 2024-10 |