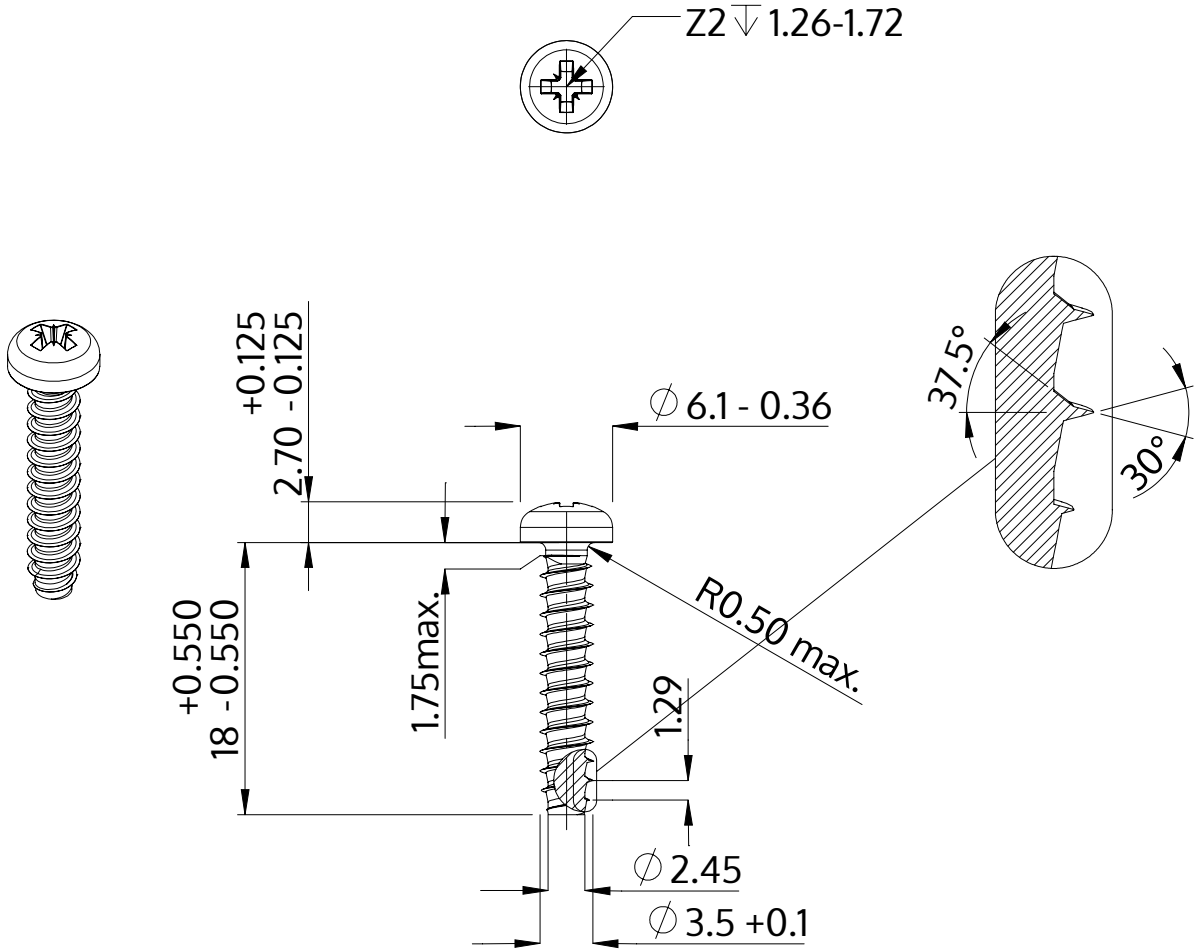

Description	STP22 3.5x18.0 - Z2
Material	stainless-steel A2
Surface	bright, pickled and passivated
Weight	1.267 kg / 1000 pieces

SCREWERK	**STP220350180E**	
Metric Drawing A4	Scale 2:1	2024-10