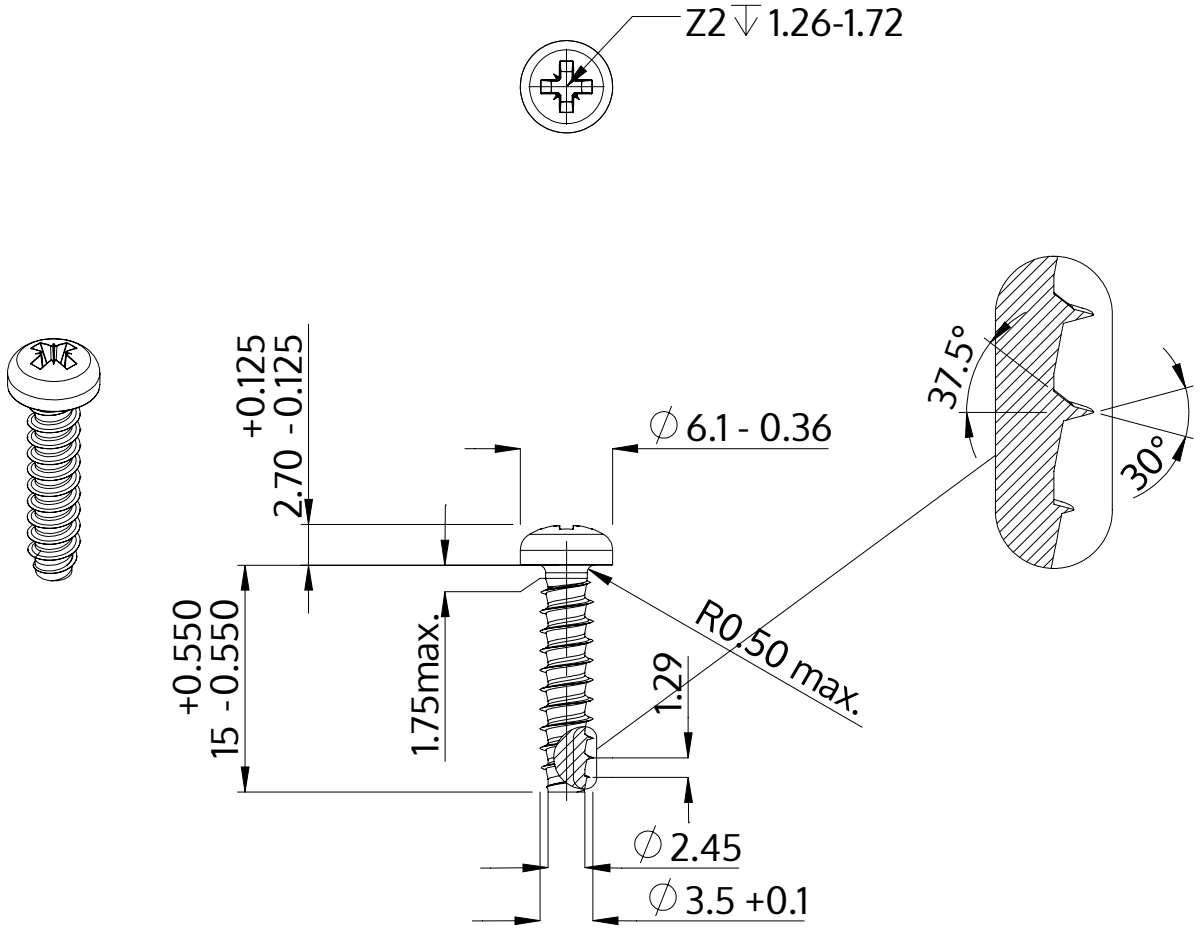

Description	STP22 3.5x15.0 - Z2
Material	stainless steel A4
Surface	bright, pickled and passivated
Weight	1.125 kg / 1000 pieces

SCREWERK	**STP220350150C**	
Metric Drawing A4	Scale 2:1	2024-10