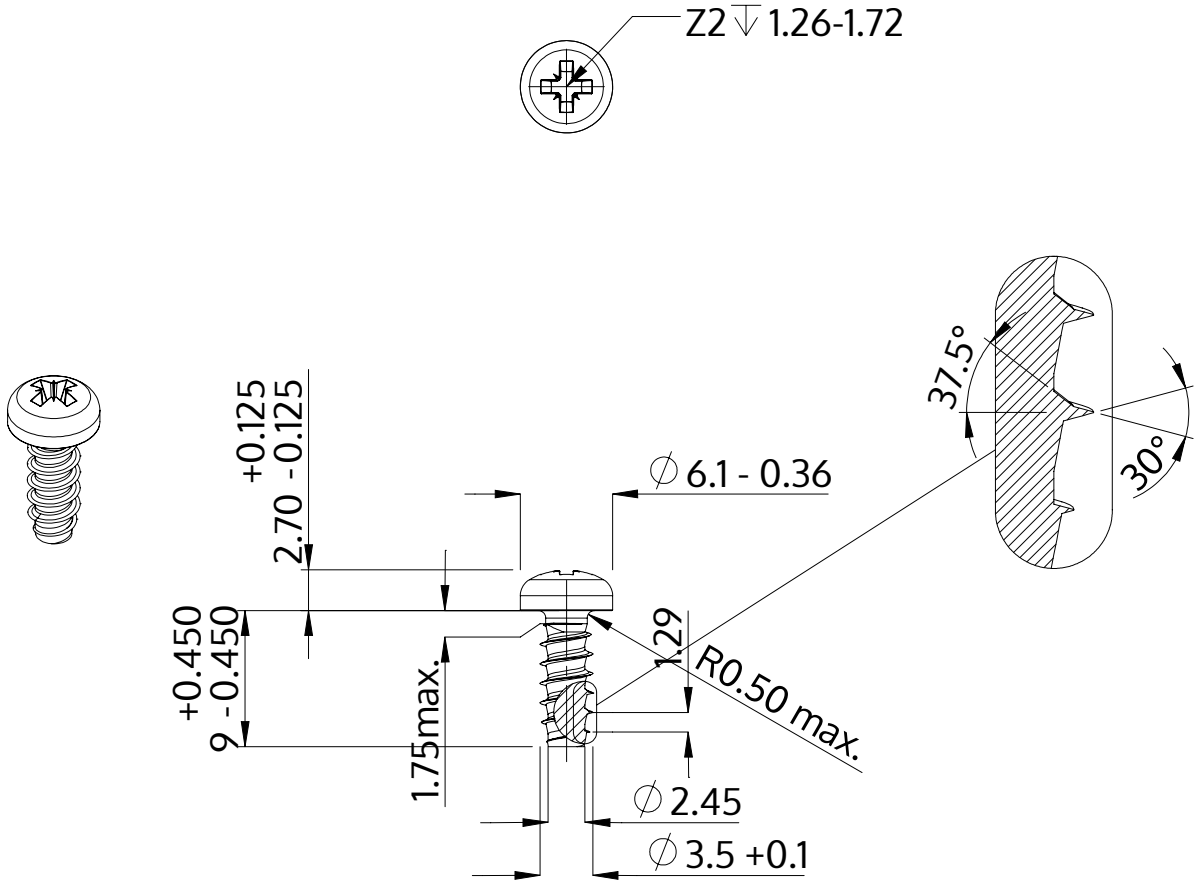

Description	STP22 3.5x9.0 - Z2
Material	steel, hardened
Surface	Zinc-Nickel-plated min. 5µm, passivated black/ Cr-VI-free, baked, sealed
Weight	0.842 kg / 1000 pieces

SCREWERK	**STP220350090B**	
Metric Drawing A4	Scale 2:1	2024-10