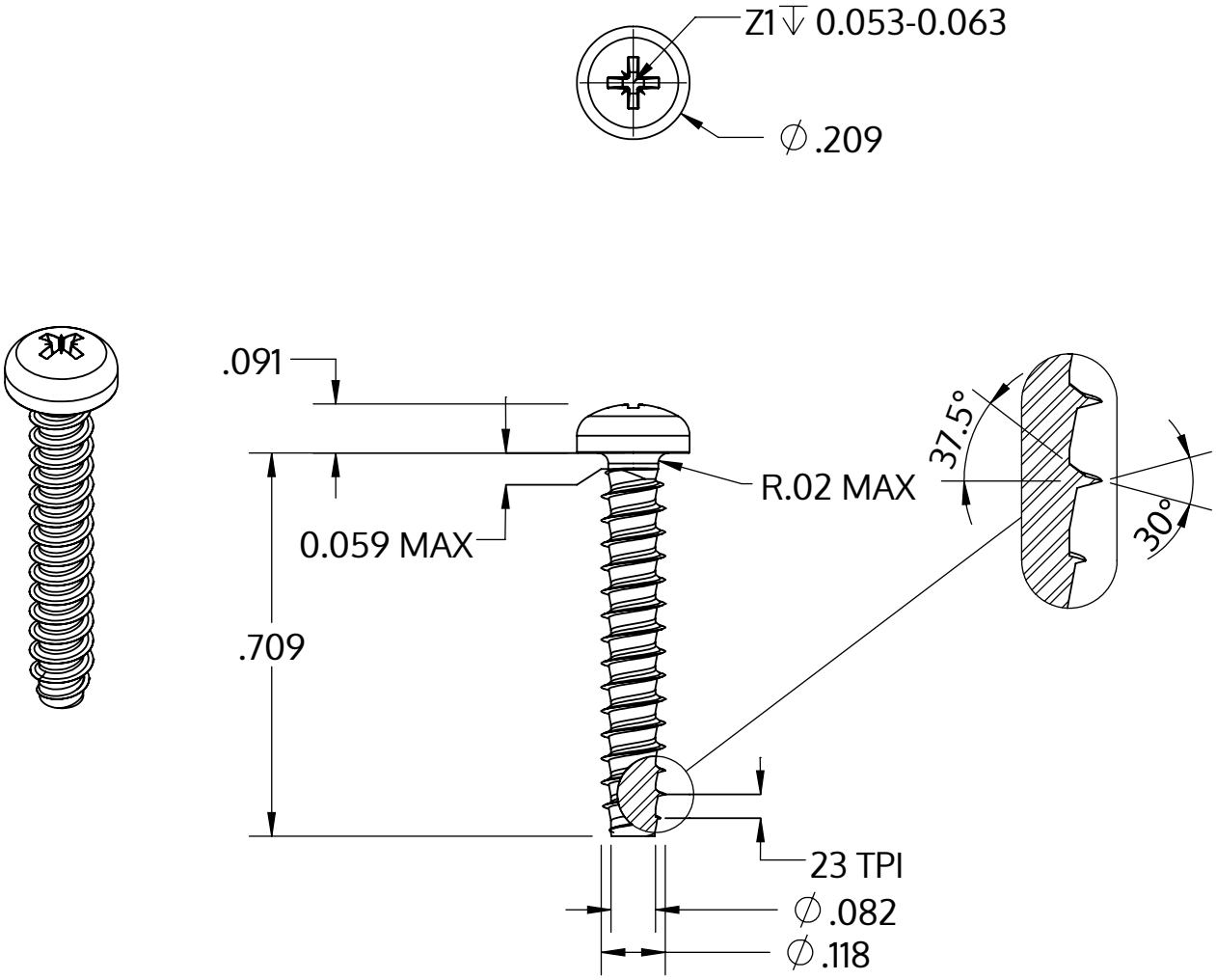


| | |
|---|---|
| Metric size | M3 x 1.12 mm |
| US size (converted) | #4-23 |
| | Tolerances [inch] |
| Length | +/- 0.021 |
| Head diameter | +0 / -0.011 |
| Head height | +/- 0.004 |
| Thread diameter | +0.003 / -0 |

| | |
|---|---|
| Descripción | STP22 3.0x18.0 - Z1 |
| Material | Acero Inoxidable A2 |
| Superficie | Laminado brillante, barnizado y pasivado |
| Peso | 0.887 kg / 1000 Piezas |

| | | |
|---|---|---|
| SCREWERK | **STP220300180E** | |
| _Zoll Zeichnung Größe A | Escalada 3:1 | 2024-10 |