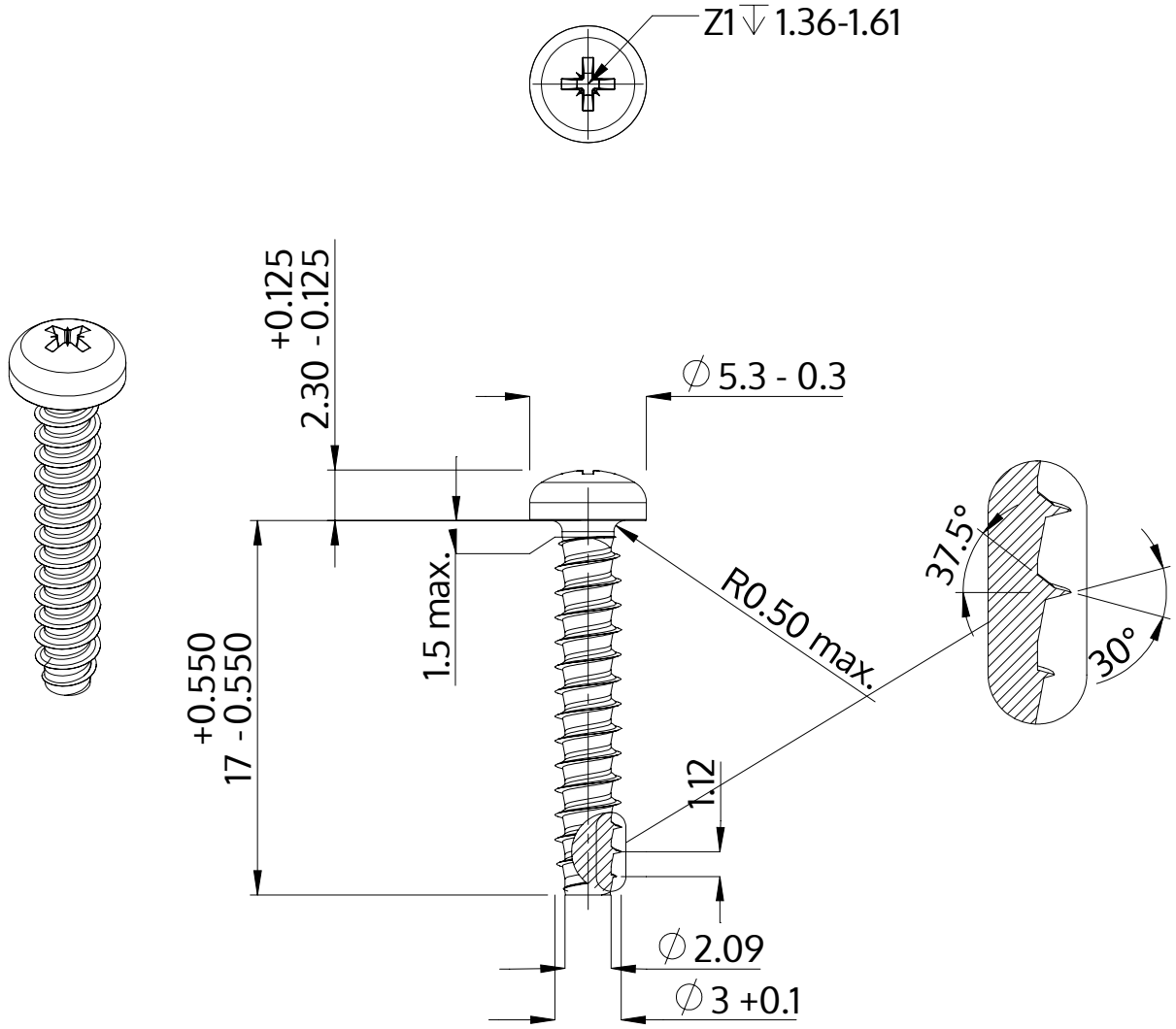

Description	STP22 3.0x17.0 - Z1
Material	stainless steel A4
Surface	bright, pickled and passivated
Weight	0.853 kg / 1000 pieces

SCREWERK	**STP220300170C**	
Metric Drawing A4	Scale 3:1	2024-10