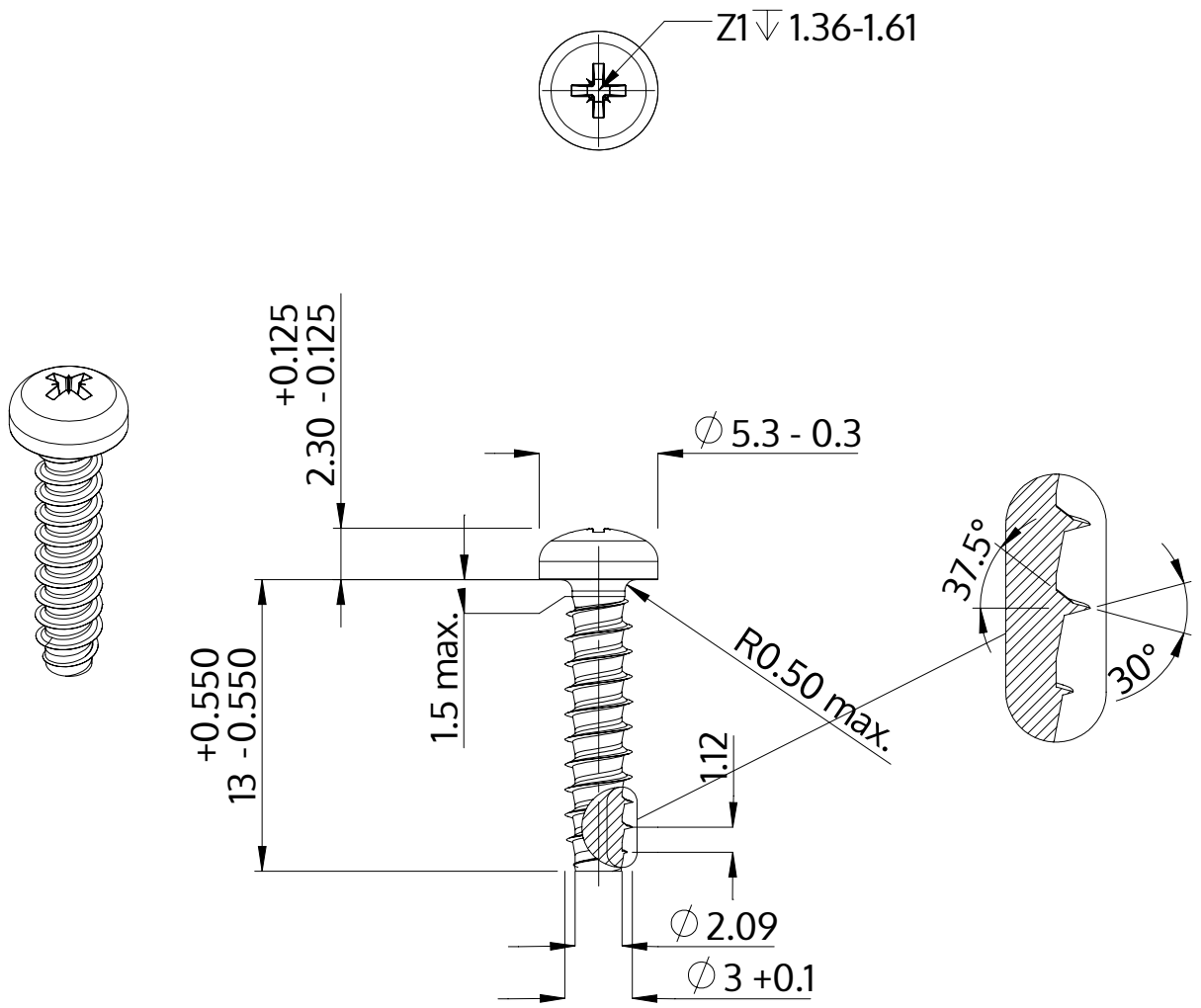

Description	STP22 3.0x13.0 - Z1
Material	steel, hardened
Surface	Zinc-Nickel-plated min. 5µm, passivated black/ Cr-VI-free, baked, sealed
Weight	0.717 kg / 1000 pieces

SCREWERK	**STP220300130B**	
Metric Drawing A4	Scale 3:1	2024-10