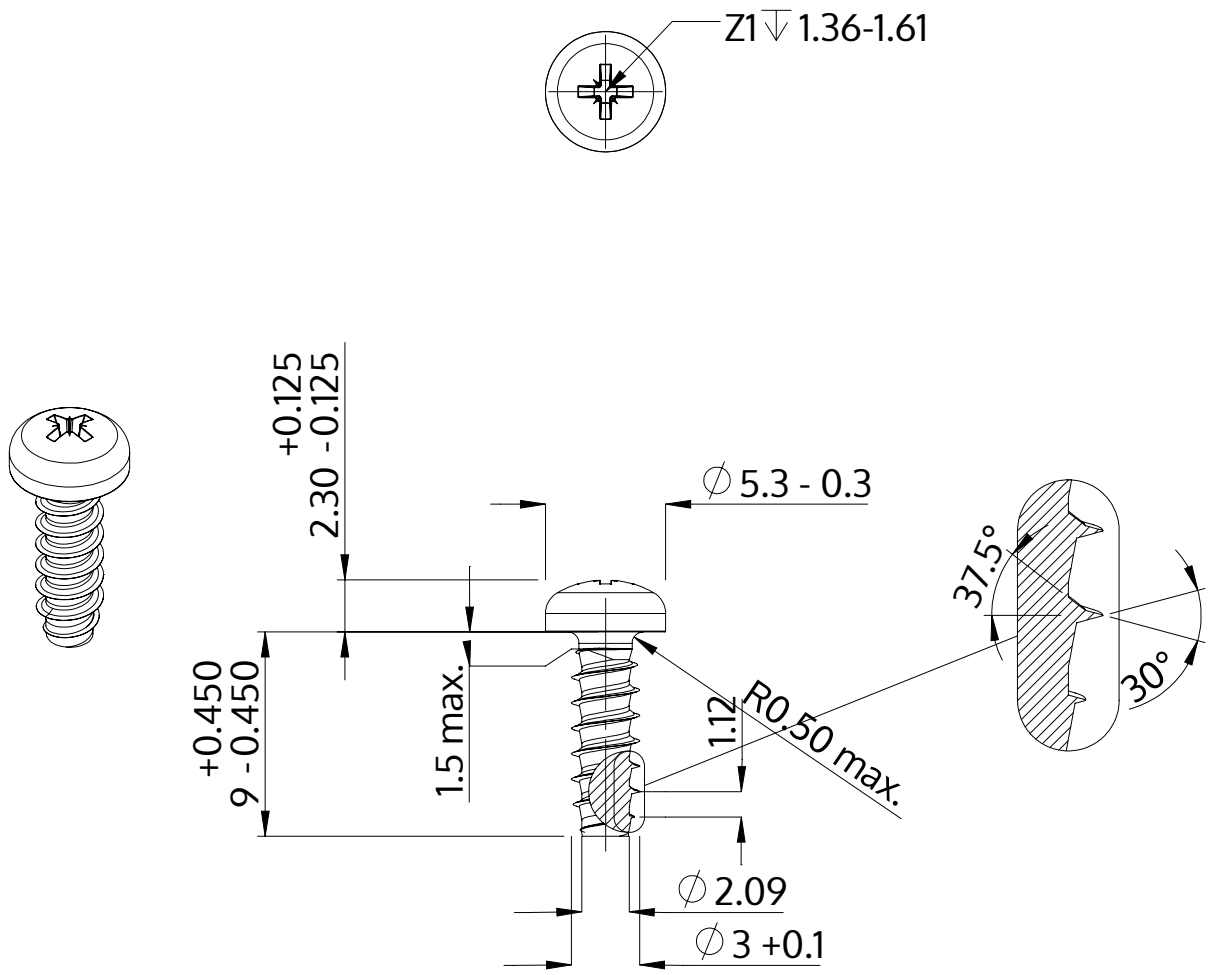

Description	STP22 3.0x9.0 - Z1
Material	steel, hardened
Surface	zinc-plated 5-7 µm, baked, blue / transparent passivated
Weight	0.581 kg / 1000 pieces

SCREWERK	**STP220300090S**	
Metric Drawing A4	Scale 3:1	2024-10