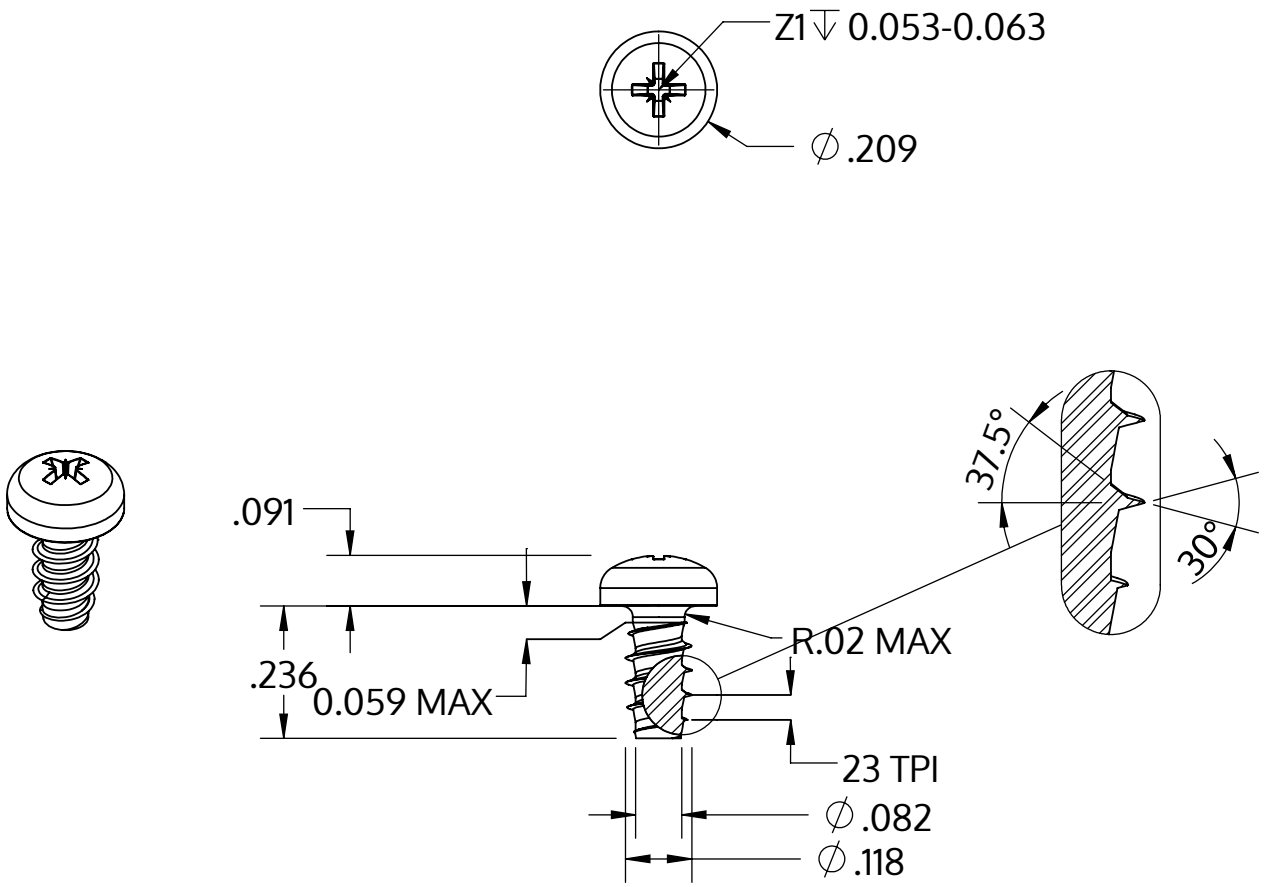


| | |
|---|---|
| Metric size | M3 x 1.12 mm |
| US size (converted) | #4-23 |
| | Tolerances [inch] |
| Length | +/- 0.014 |
| Head diameter | +0 / -0.011 |
| Head height | +/- 0.004 |
| Thread diameter | +0.003 / -0 |

| | |
|---|---|
| Description | STP22 3.0x6.0 - Z1 |
| Material | steel, hardened |
| Surface | Zinc-Nickel-plated min. 5µm, passivated black/ Cr-VI-free, baked, sealed |
| Weight | 0.479 kg / 1000 pieces |

| | | |
|---|---|---|
| SCREWERK | **STP220300060B** | |
| Inch Drawing Size A | Scale 3:1 | 2024-10 |