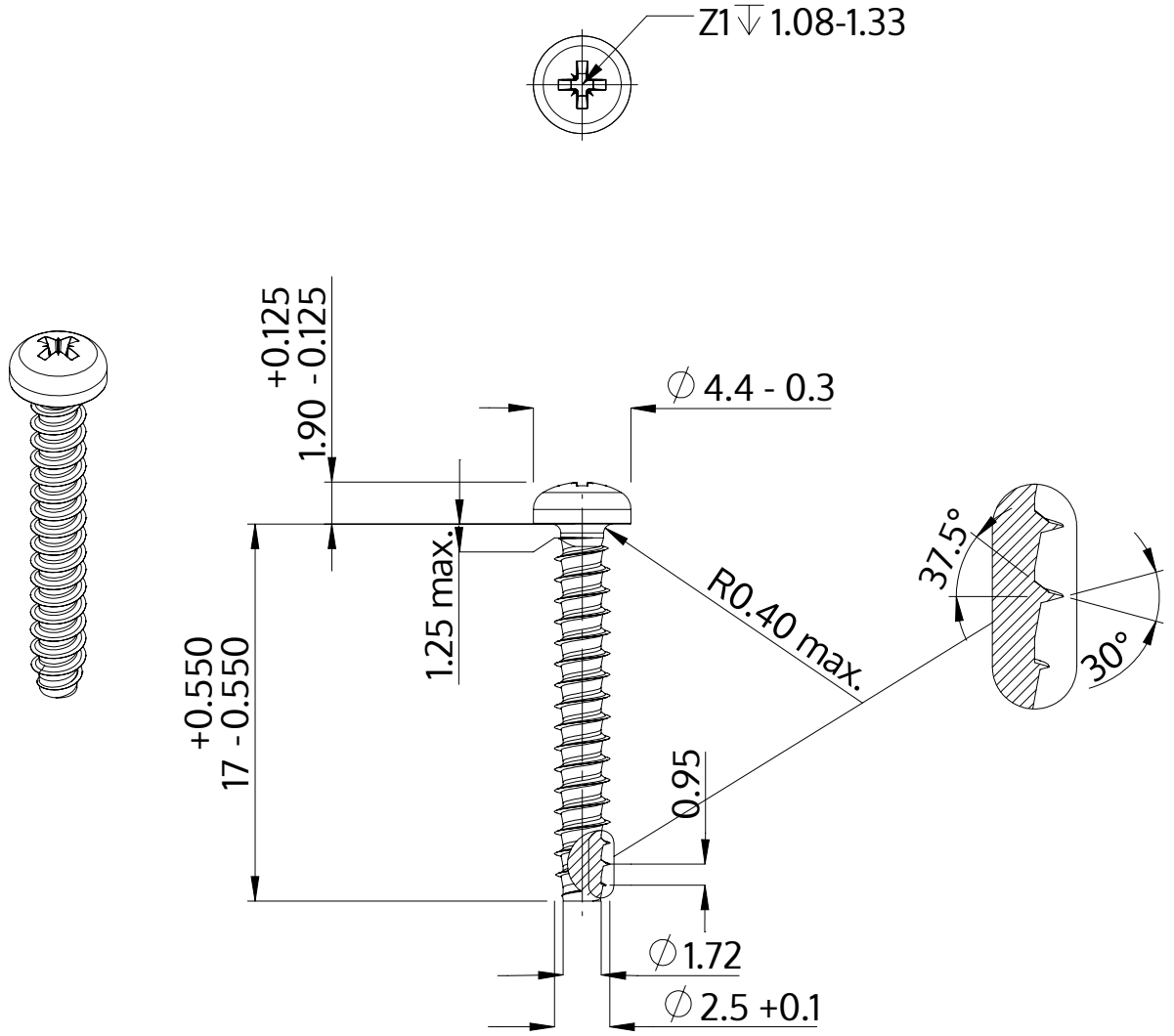

Description	STP22 2.5x17.0 - Z1
Material	stainless steel A4
Surface	bright, pickled and passivated
Weight	0.554 kg / 1000 pieces

SCREWERK	**STP220250170C**	
Metric Drawing A4	Scale 3:1	2024-10