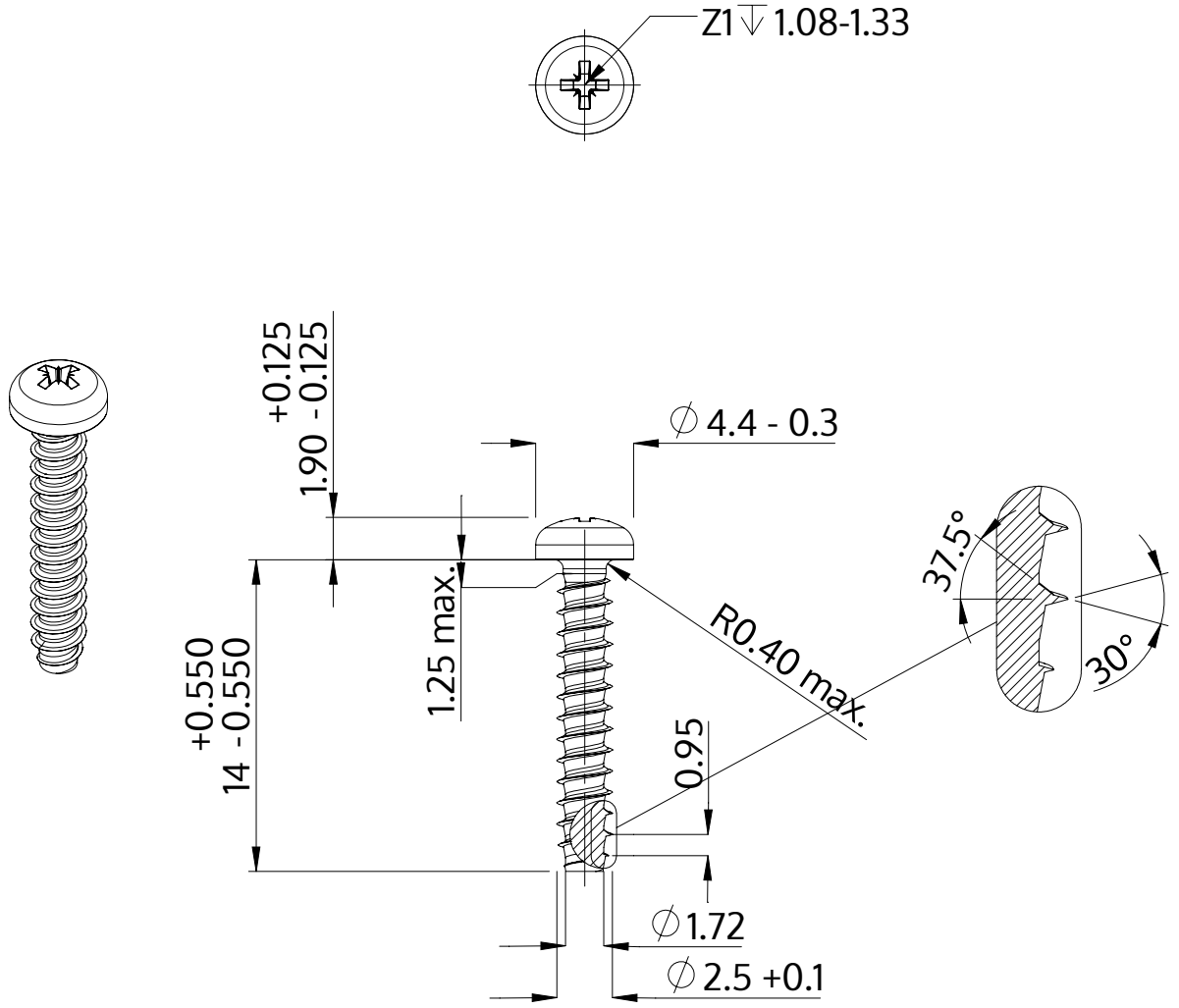

Description	STP22 2.5x14.0 - Z1
Material	steel, hardened
Surface	Zinc-Nickel-plated min. 5µm, passivated black/ Cr-VI-free, baked, sealed
Weight	0.482 kg / 1000 pieces

SCREWERK	**STP220250140B**	
Metric Drawing A4	Scale 3:1	2024-10