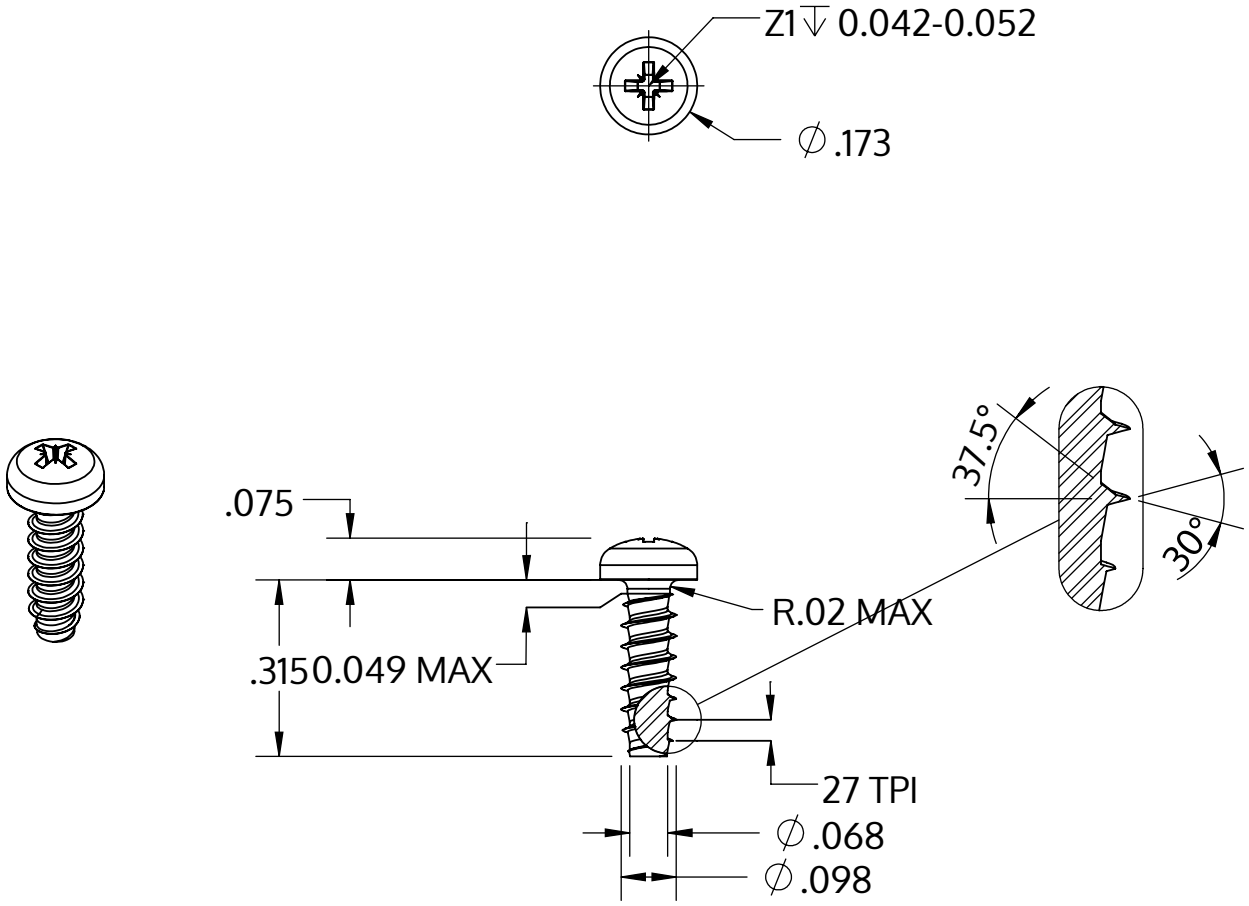


| | |
|---|---|
| Metric size | M2.5 x 0.95 mm |
| US size (converted) | #3-27 |
| | Tolerances [inch] |
| Length | +/- 0.017 |
| Head diameter | +0 / -0.011 |
| Head height | +/- 0.004 |
| Thread diameter | +0.003 / -0 |

| | |
|---|---|
| Description | STP22 2.5x8.0 - Z1 |
| Matière | acier inoxydable A2 |
| Surface | brillant décapé et passivé |
| Poids | 0.338 kg / 1000 Unité |

| | | |
|---|---|---|
| SCREWERK | **STP220250080E** | |
| _Zoll Zeichnung Größe A | Redimensionner 3:1 | 2024-10 |