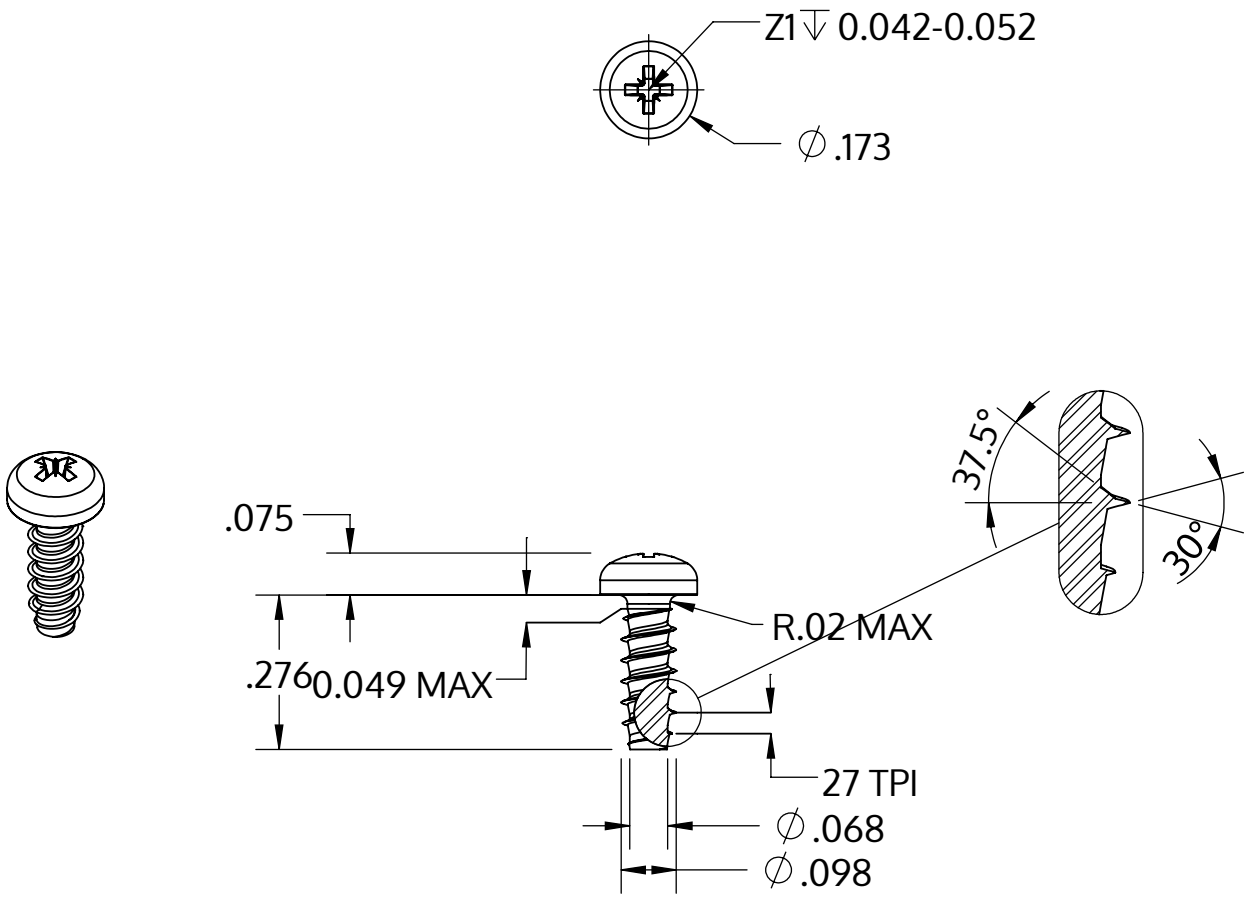


| | |
|---|---|
| Metric size | M2.5 x 0.95 mm |
| US size (converted) | #3-27 |
| | Tolerances [inch] |
| Length | +/- 0.017 |
| Head diameter | +0 / -0.011 |
| Head height | +/- 0.004 |
| Thread diameter | +0.003 / -0 |

| | |
|---|---|
| Opis | STP22 2.5x7.0 - Z1 |
| Materiał | Stal szlachetna A4 |
| Powierzchnia | Prosta, bejcowana i pasywowana |
| Waga | 0.314 kg / 1000 sztuk |

| | | |
|---|---|---|
| SCREWERK | **STP220250070C** | |
| _Zoll Zeichnung Größe A | Skala 3:1 | 2024-10 |