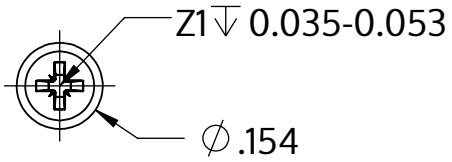

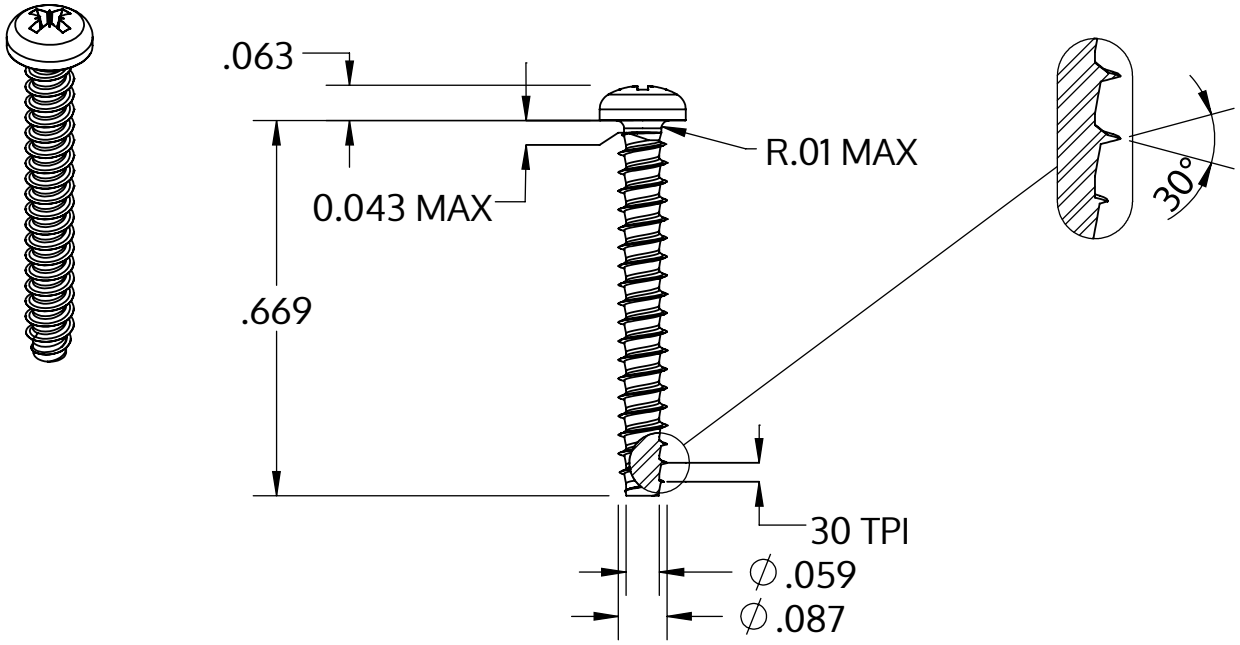

Metric size	M2.2 x 0.85 mm
US size (converted)	#2-30
	Tolerances [inch]
Length	+/- 0.021
Head diameter	+0 / -0.011
Head height	+/- 0.004
Thread diameter	+0.003 / -0

Descriere	STP22 2.2x17.0 - Z1
Material	oțel, călit
Exterior	zincat 5-7 µm, recopt, pasivat transparent/albastru
Greutate	0.412 kg / 1000 unități

SCREWERK	**STP220220170S**	
_Zoll Zeichnung Größe A	Scalarea None:1	2024-04