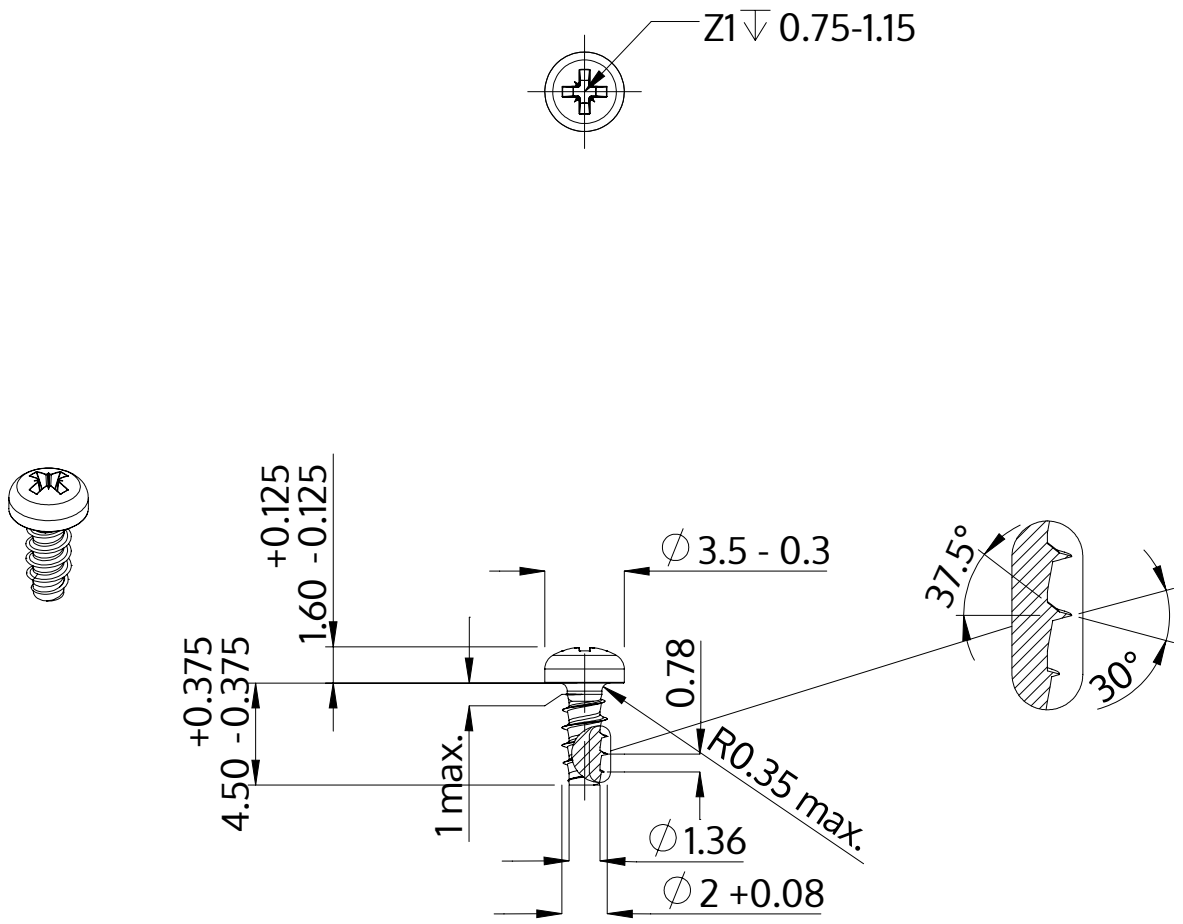

Description	STP22 2.0x4.5 - Z1
Material	steel, hardened
Surface	Zinc-Nickel-plated min. 5µm, passivated black/ Cr-VI-free, baked, sealed
Weight	0.142 kg / 1000 pieces

SCREWERK	**STP220200045B**	
Metric Drawing A4	Scale None:1	2024-04