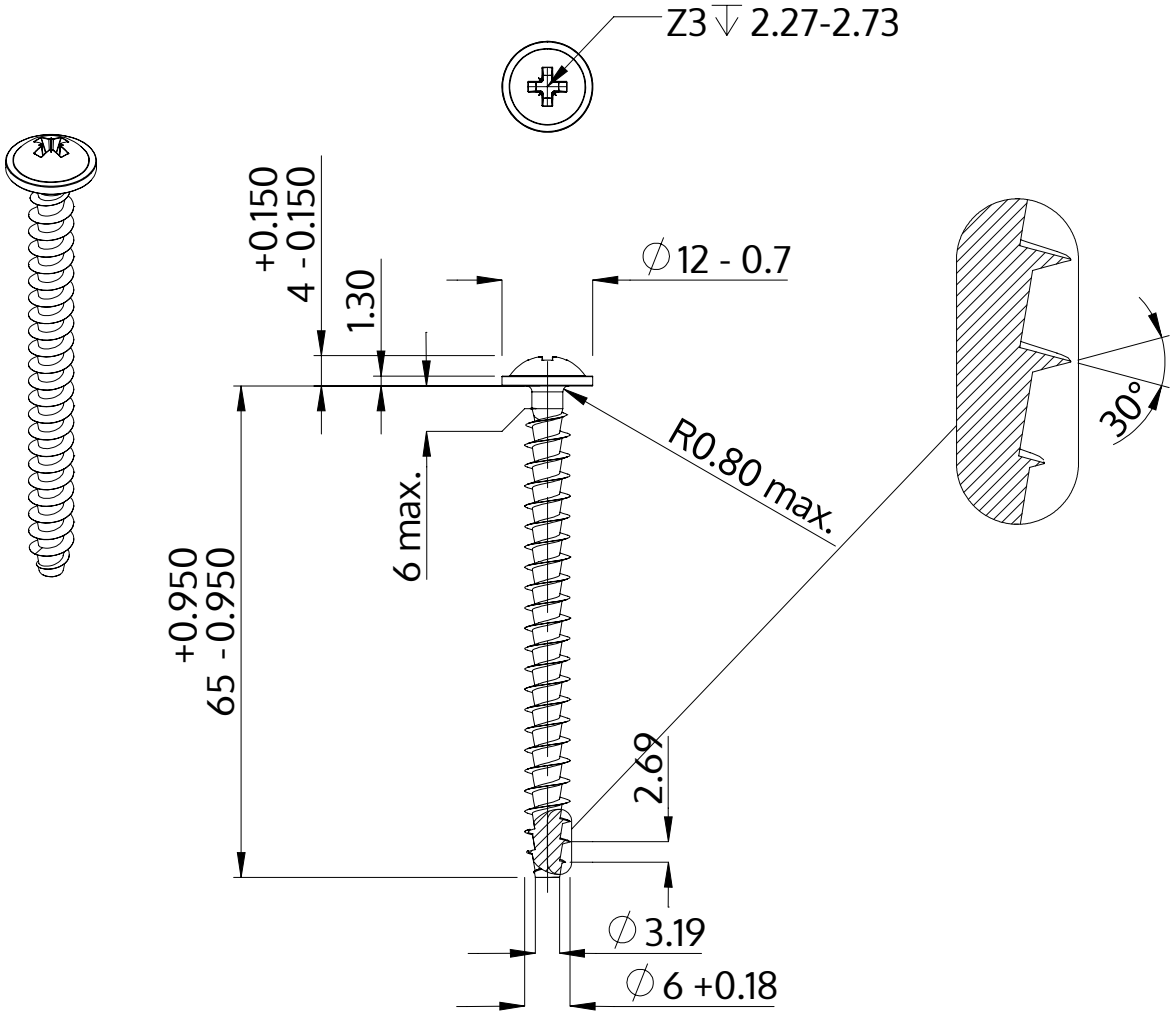

Description	STP21A 6.0x65.0 - Z3
Material	steel, hardened
Surface	zinc-plated 5-7 µm, baked, blue / transparent passivated
Weight	8.340 kg / 1000 pieces

SCREWERK	**STP21A0600650S**	
Metric Drawing A4	Scale 1:1	2024-10