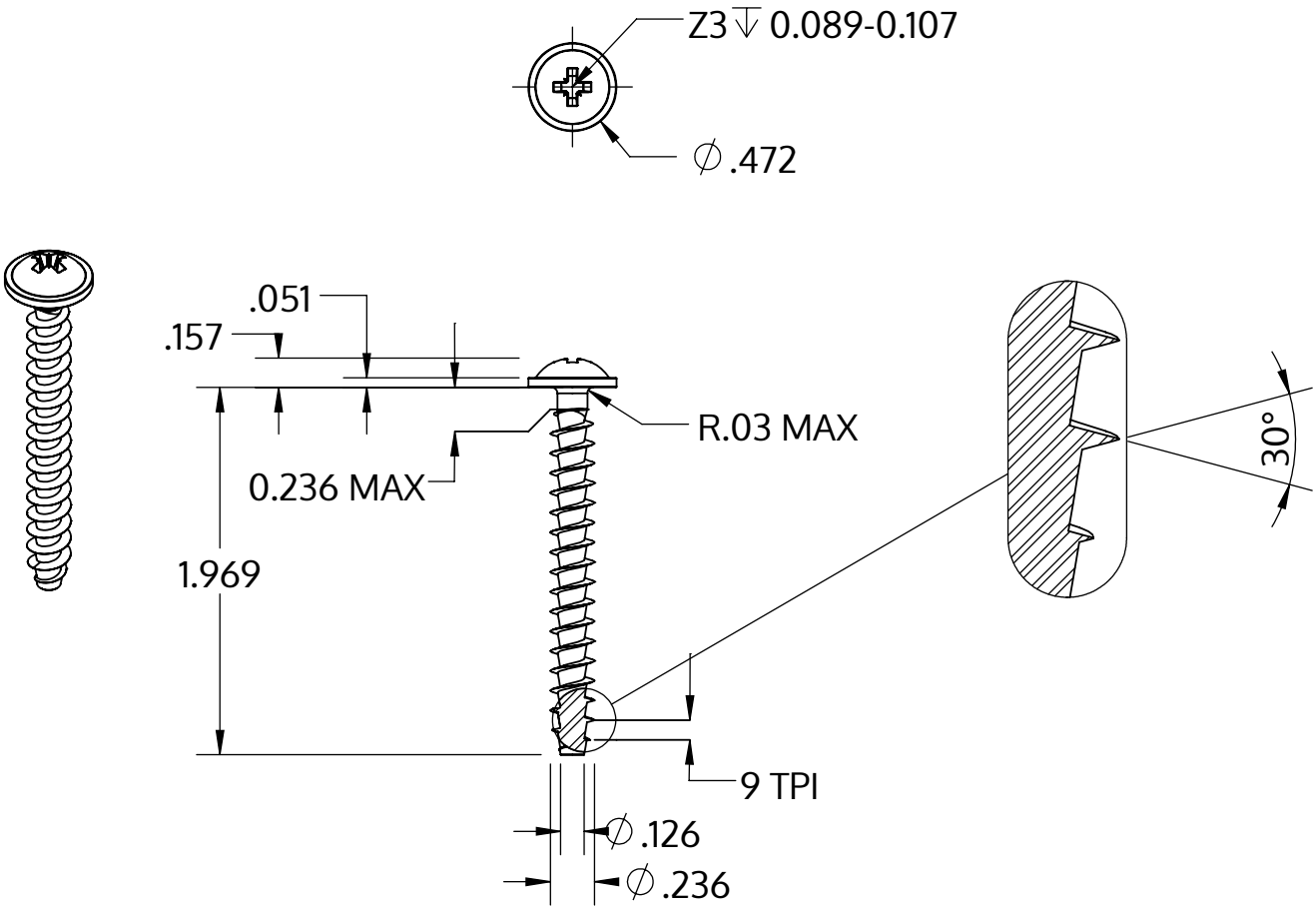


| | |
|---|---|
| Metric size | M6 x 2.69 mm |
| US size (converted) | #0.236-9 |
| | Tolerances [inch] |
| Length | +/- 0.031 |
| Head diameter | +0 / -0.027 |
| Head height | +/- 0.005 |
| Thread diameter | +0.007 / -0 |

| | |
|---|---|
| Descripción | STP21A 6.0x50.0 - Z3 |
| Material | Acero Inoxidable A2 |
| Superficie | Laminado brillante, barnizado y pasivado |
| Peso | 6.808 kg / 1000 Piezas |

| | | |
|---|---|---|
| SCREWERK | **STP21A0600500E** | |
| _Zoll Zeichnung Größe A | Escalada 1:1 | 2024-10 |