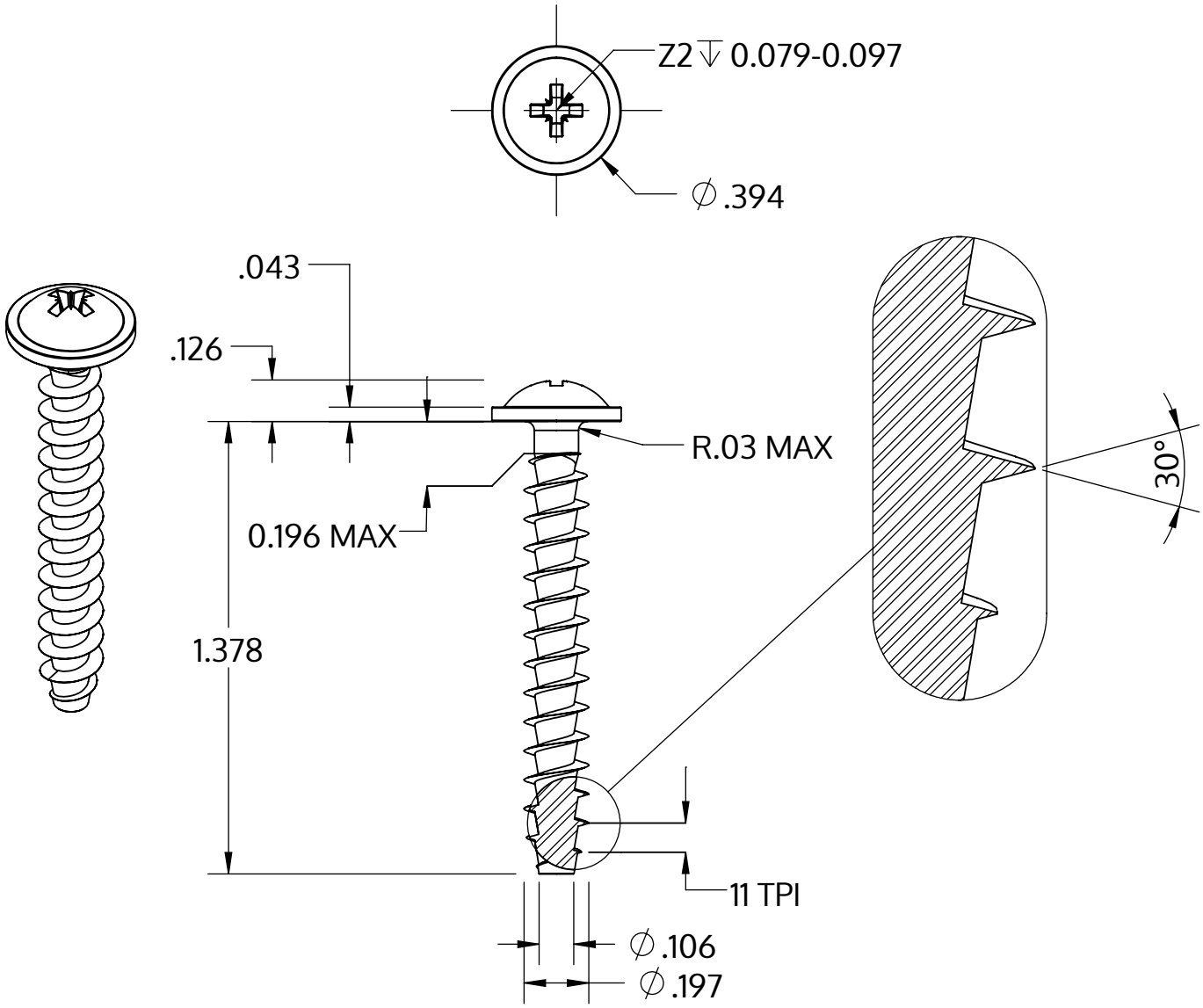

Metric size	M5 x 2.24 mm
US size (converted)	#11-11
	Tolerances [inch]
Length	+/- 0.031
Head diameter	+0 / -0.022
Head height	+/- 0.005
Thread diameter	+0.007 / -0

Descriere	STP21A 5.0x35.0 - Z2
Material	oțel, călit
Exterior	zincat 5-7 µm, recopt, pasivat transparent/albastru
Greutate	3.655 kg / 1000 unități

SCREWERK	**STP21A0500350S**	
_Zoll Zeichnung Größe A	Scalarea 2:1	2024-10