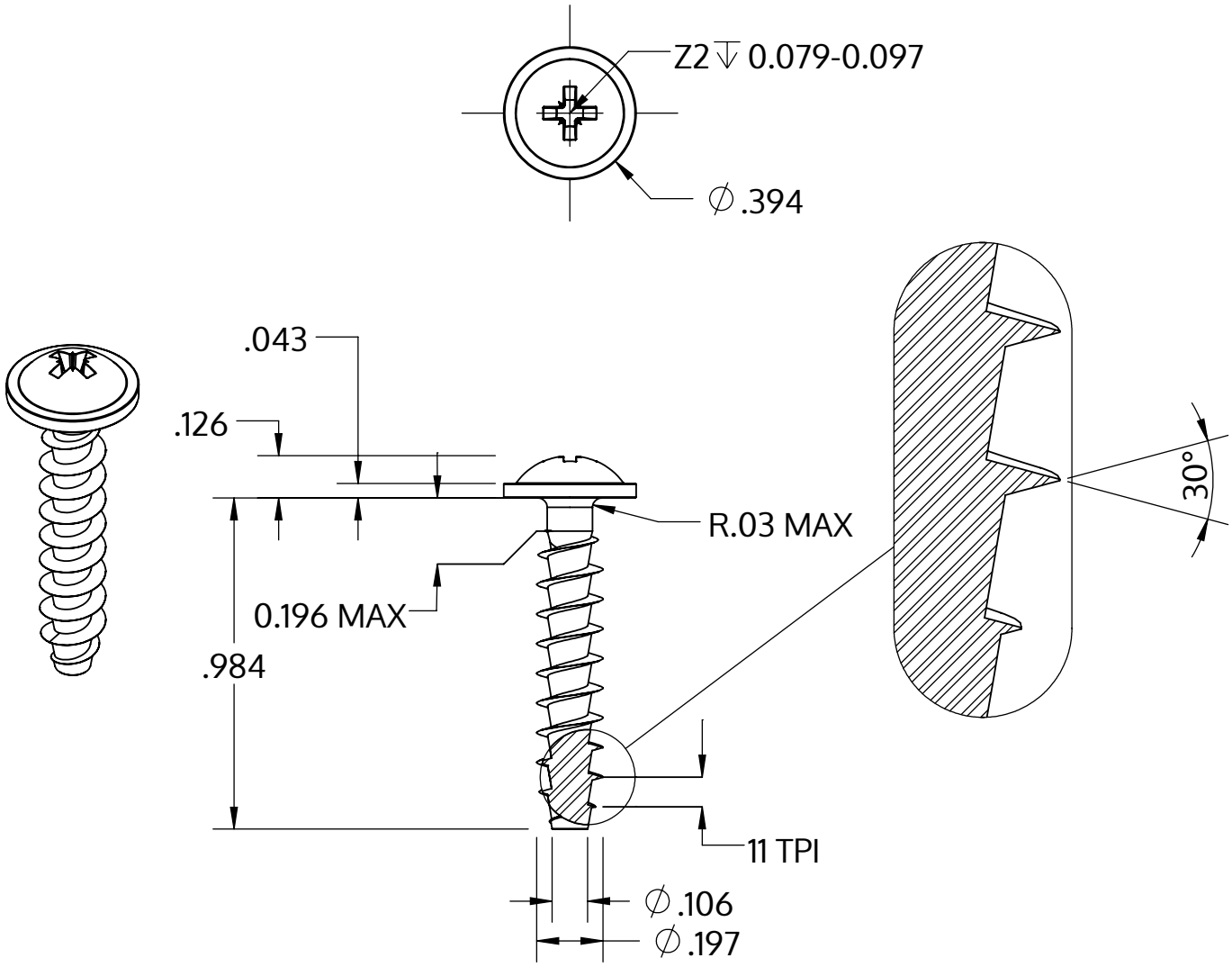


| | |
|---|---|
| Metric size | M5 x 2.24 mm |
| US size (converted) | #11-11 |
| | Tolerances [inch] |
| Length | +/- 0.025 |
| Head diameter | +0 / -0.022 |
| Head height | +/- 0.005 |
| Thread diameter | +0.007 / -0 |

| | |
|---|---|
| Descripción | STP21A 5.0x25.0 - Z2 |
| Material | Acero, endurecido |
| Superficie | Zinc-Niquelado, pasivado negro/ sin Cr-VI, recocido, sellado |
| Peso | 2.914 kg / 1000 Piezas |

| | | |
|---|---|---|
| SCREWERK | **STP21A0500250B** | |
| _Zoll Zeichnung Größe A | Escalada None:1 | 2024-04 |