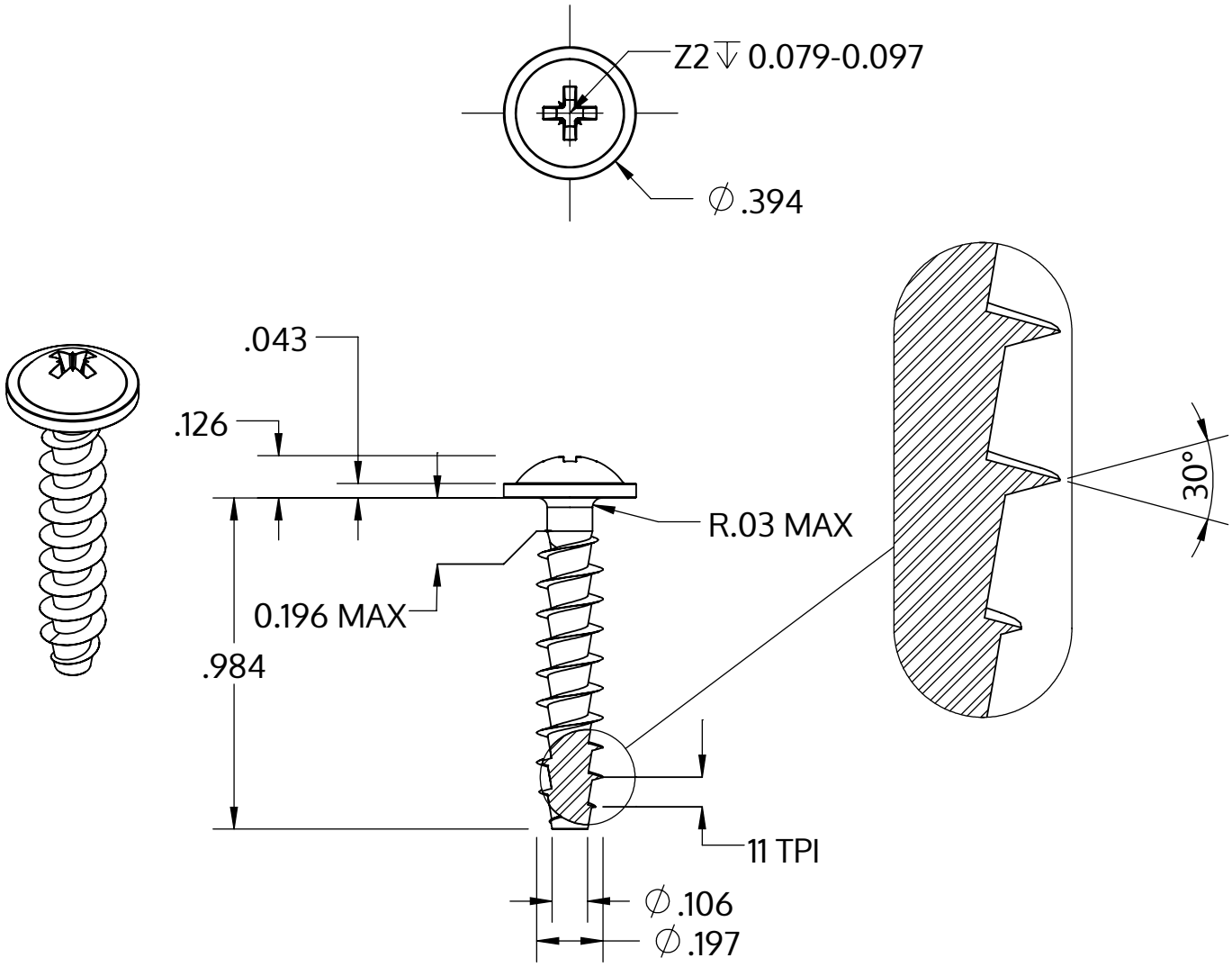

Metric size	M5 x 2.24 mm
US size (converted)	#11-11
	Tolerances [inch]
Length	+/- 0.025
Head diameter	+0 / -0.022
Head height	+/- 0.005
Thread diameter	+0.007 / -0

Description	STP21A 5.0x25.0 - Z2
Material	steel, hardened
Surface	Zinc-Nickel-plated min. 5µm, passivated black/ Cr-VI-free, baked, sealed
Weight	2.914 kg / 1000 pieces

SCREWERK	**STP21A0500250B**	
Inch Drawing Size A	Scale 2:1	2024-10