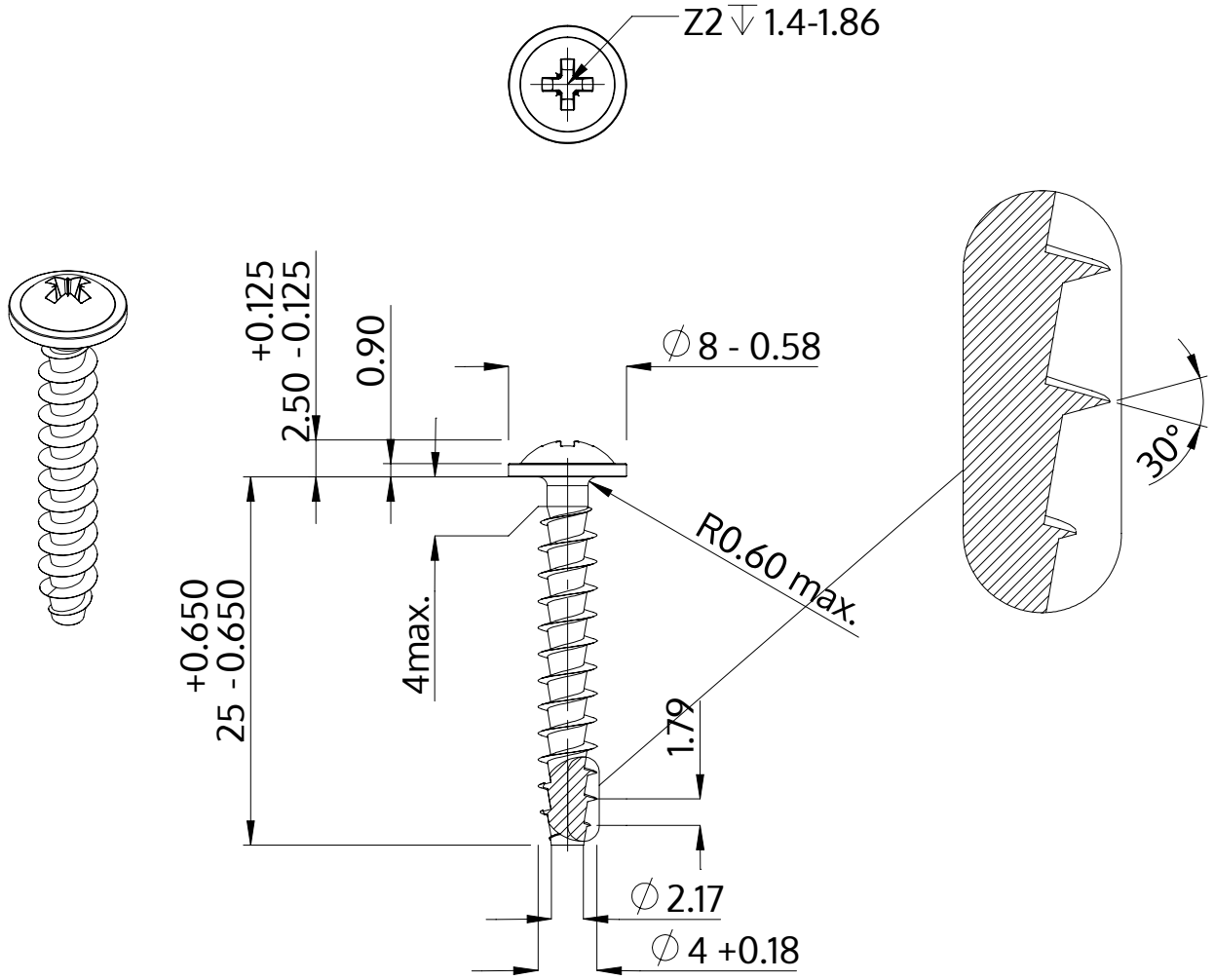

Description	STP21A 4.0x25.0 - Z2
Material	stainless-steel A2
Surface	bright, pickled and passivated
Weight	1.704 kg / 1000 pieces

SCREWERK	**STP21A0400250E**	
Metric Drawing A4	Scale 2:1	2024-10