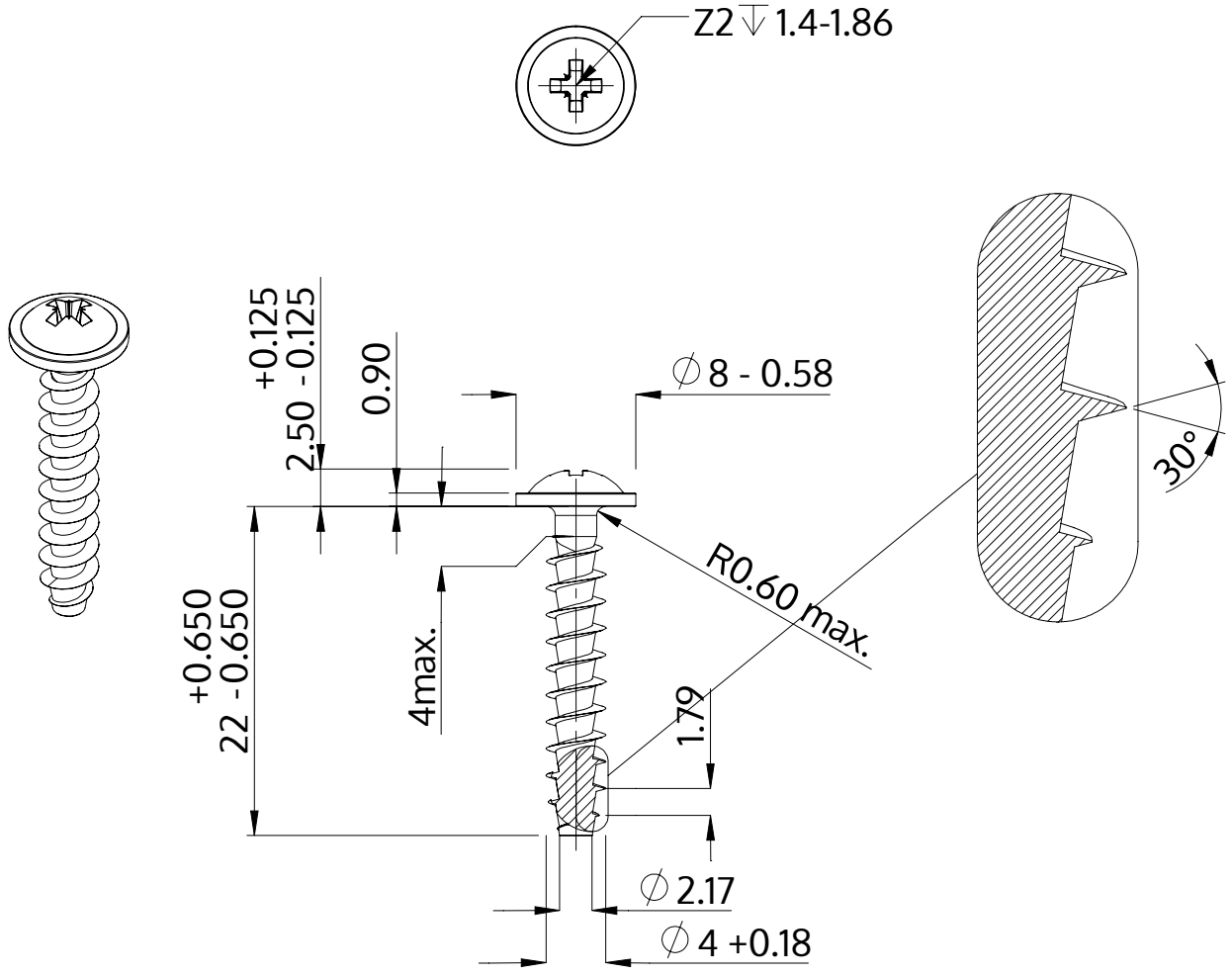

Description	STP21A 4.0x22.0 - Z2
Material	steel, hardened
Surface	zinc-plated 5-7 µm, baked, blue / transparent passivated
Weight	1.560 kg / 1000 pieces

SCREWERK	**STP21A0400220S**	
Metric Drawing A4	Scale 2:1	2024-10