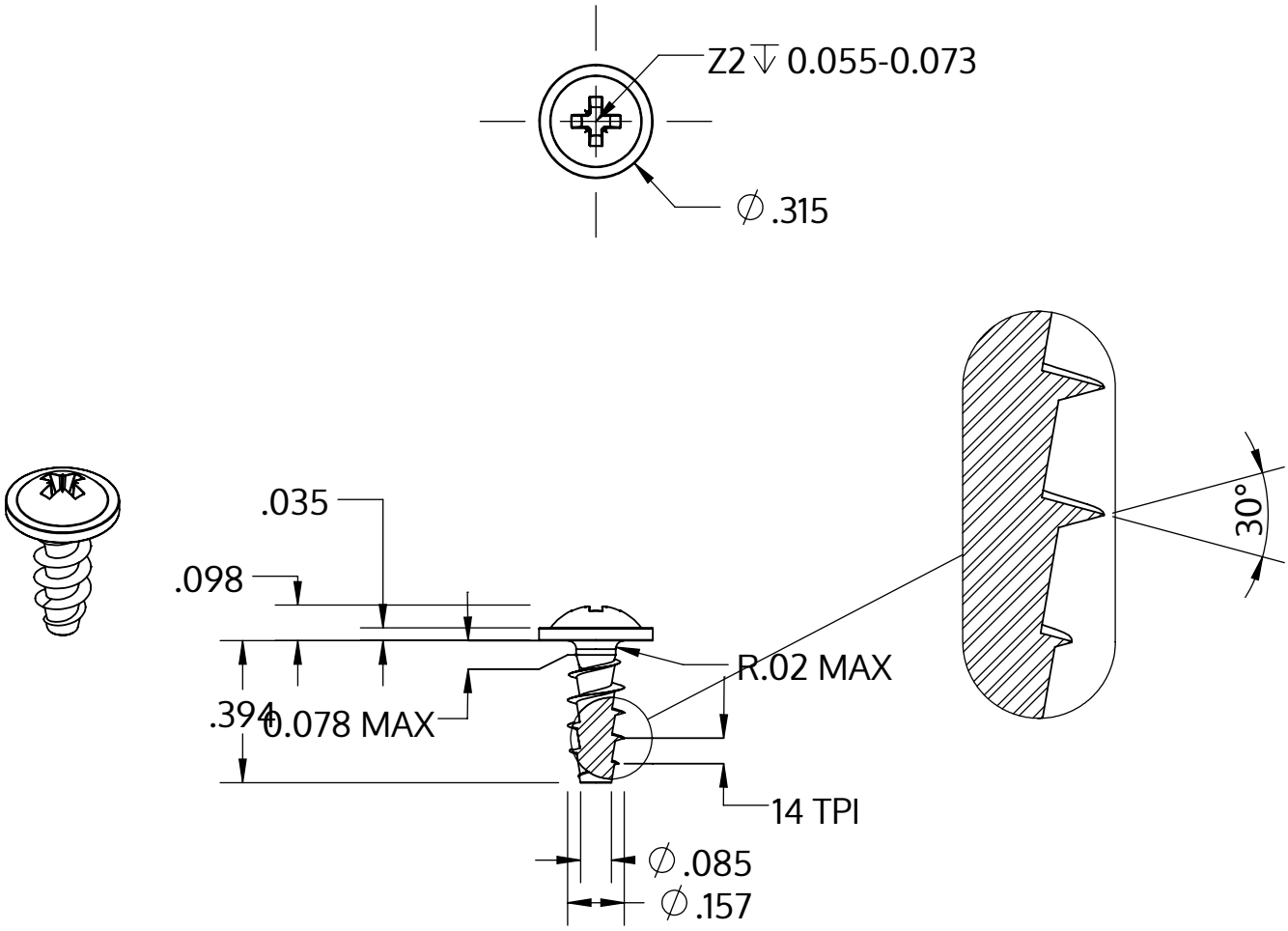


| | |
|---|---|
| Metric size | M4 x 1.79 mm |
| US size (converted) | #8-14 |
| | Tolerances [inch] |
| Length | +/- 0.017 |
| Head diameter | +0 / -0.022 |
| Head height | +/- 0.004 |
| Thread diameter | +0.007 / -0 |

| | |
|---|---|
| Descripción | STP21A 4.0x10.0 - Z2 |
| Material | Acero Inoxidable A2 |
| Superficie | Laminado brillante, barnizado y pasivado |
| Peso | 0.980 kg / 1000 Piezas |

| | | |
|---|---|---|
| SCREWERK | **STP21A0400100E** | |
| _Zoll Zeichnung Größe A | Escalada 2:1 | 2024-10 |