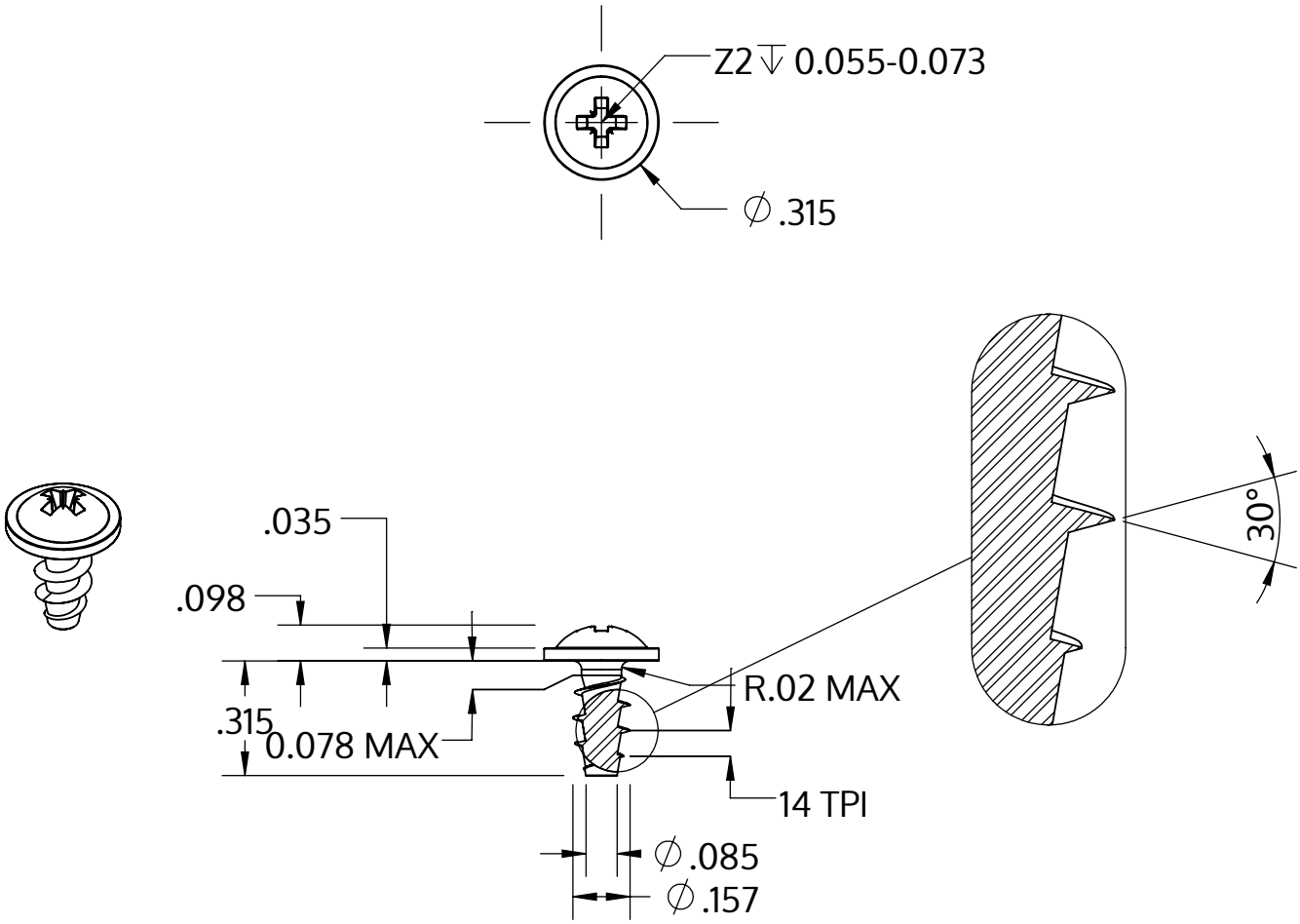

Metric size	M4 x 1.79 mm
US size (converted)	#8-14
	Tolerances [inch]
Length	+/- 0.017
Head diameter	+0 / -0.022
Head height	+/- 0.004
Thread diameter	+0.007 / -0

Description	STP21A 4.0x8.0 - Z2
Material	stainless-steel A2
Surface	bright, pickled and passivated
Weight	0.884 kg / 1000 pieces

SCREWERK	**STP21A0400080E**	
Inch Drawing Size A	Scale None:1	2024-04