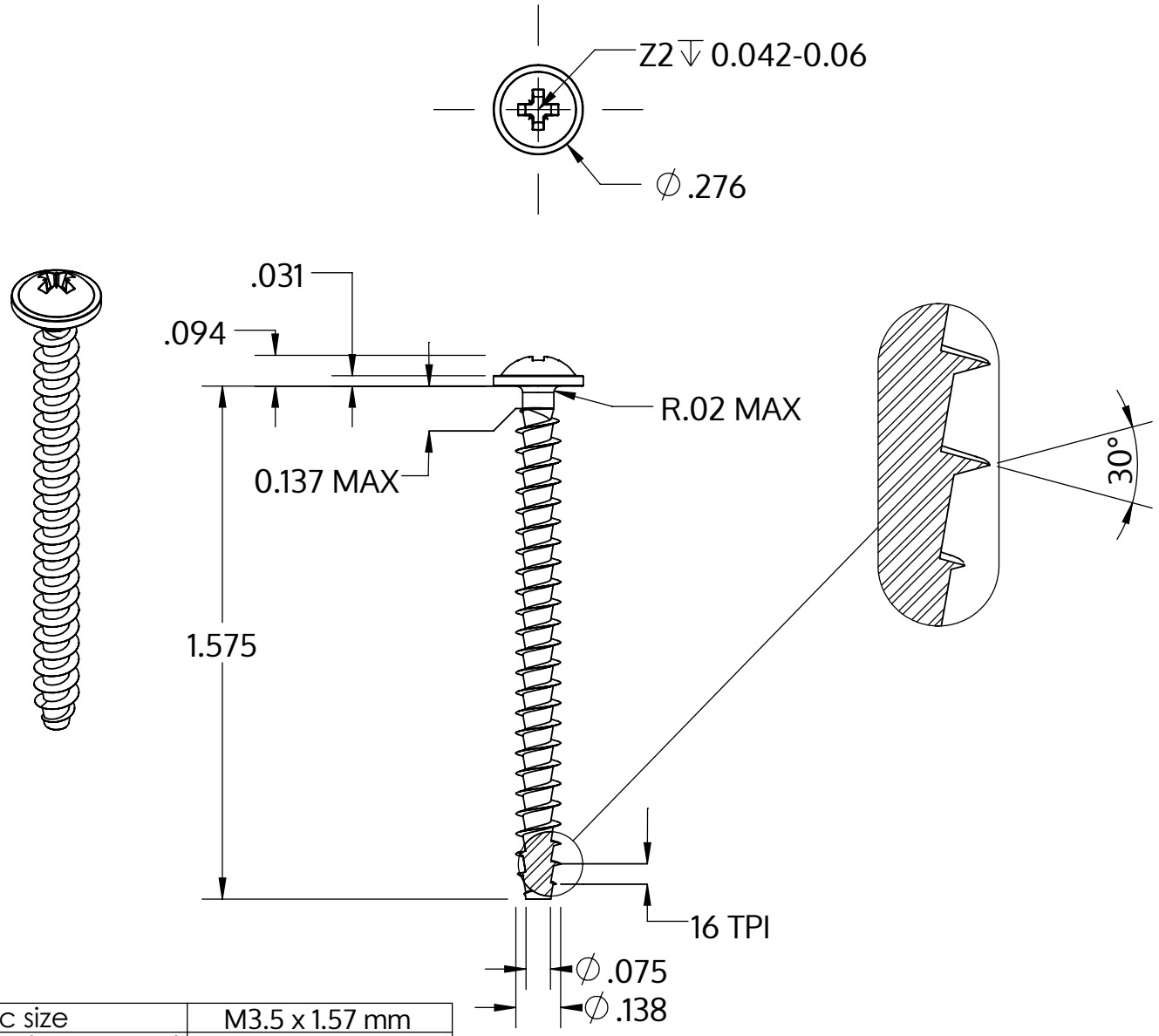

Metric size	M3.5 x 1.57 mm
US size (converted)	#6-16
	Tolerances [inch]
Length	+/- 0.031
Head diameter	+0 / -0.022
Head height	+/- 0.004
Thread diameter	+0.007 / -0

Descrizione	STP21A 3.5x40.0 - Z2
Materiale	acciaio inossidabile A2
Superficie	bianco-decapato e passivato
Peso	1.844 kg / 1000 pezzi

SCREWERK	**STP21A0350400E**	
_Zoll Zeichnung Größe A	Scala 2:1	2024-10