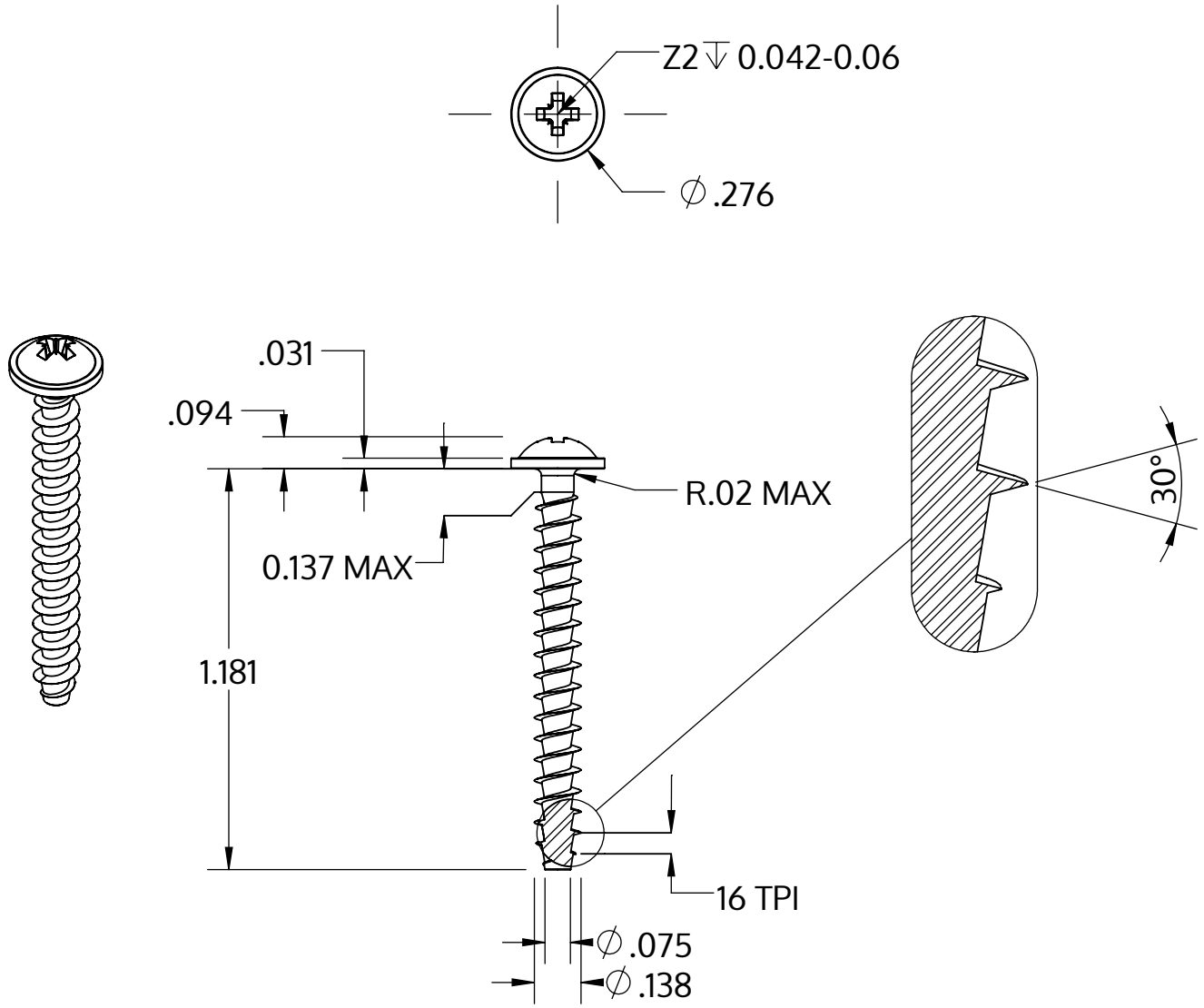

Metric size	M3.5 x 1.57 mm
US size (converted)	#6-16
	Tolerances [inch]
Length	+/- 0.025
Head diameter	+0 / -0.022
Head height	+/- 0.004
Thread diameter	+0.007 / -0

Description	STP21A 3.5x30.0 - Z2
Matière	acier inoxydable A2
Surface	brillant décapé et passivé
Poids	1.472 kg / 1000 Unité

SCREWERK	**STP21A0350300E**	
_Zoll Zeichnung Größe A	Redimensionner None:1	2024-04